Intoxilyzer 5000 Service Manual
(68 series)

Revision 1.3

4/20/95

Chapter 1
Introduction 4
General Description 4
About This Manual 5
Terms and Conventions 5
Contacting Customer Service 6

Part I
System Circuit Descriptions 7

Chapter 2
020867 - Switch Board Assembly 8
General Description 8
Schematic 9
Printed Circuit Board Map/BOM 10
Testing Procedure/Troubleshooting Tips 11

Chapter 3
020725 - Communication Board Assembly 12
General Description 12
Schematic 13
Printed Circuit Board Map/BOM 14
Testing Procedure/Troubleshooting Tips 15

Chapter 4
020524 - Internal Printer Board Assembly 16
General Description 16
Schematic 19
Printed Circuit Board Map/BOM 20
Testing Procedure/Troubleshooting Tips 21

Chapter 5
020787 - Controller Board Assembly 22
General Description 22
Schematic 25
Printed Circuit Board Map/BOM 26
Testing Procedure/Troubleshooting Tips 27

Chapter 6
020785 - Analog Processor Board Assembly **28**
General Description 28
Schematic 29
Printed Circuit Board Map/BOM 30
Testing Procedure/Troubleshooting Tips 31

Chapter 7
020833 - CPU Board Assembly **32**
General Description 32
Schematic 33
Printed Circuit Board Map/BOM 34
Testing Procedure/Troubleshooting Tips 35

Chapter 8
020860/020861 - Mother Board Assembly **36**
General Description 36
Schematic 37
Printed Circuit Board Map/BOM 38
Testing Procedure/Troubleshooting Tips 39

Chapter 9
020853 - Options Board Assembly **40**
General Description 40
Schematic 41
Printed Circuit Board Map/BOM 42
Testing Procedure/Troubleshooting Tips 43

Part II
Final Instrument Testing Procedures **44**

Chapter 11
Final Intstrument Test Procedure **45**

Chapter 12
Instrument Calibration Procedure **46**

- **Chapter 2, 020867 - Switch Board Assembly** 8
- **Chapter 3, 020725 - Communication Board Assembly** 12
- **Chapter 4, 020524 - Internal Printer Board Assembly** 16
- **Chapter 5, 020787 - Controller Board Assembly** 22
- **Chapter 6, 020785 - Analog Processor Board Assembly** 28
- **Chapter 7, 020833 - CPU Board Assembly** 32
- **Chapter 8, 020860/020861 - Mother Board Assembly** 36
- **Chapter 9, 020853 - Options Board Assembly** 40
- **Chapter 10, 020712 - Remote Turn-On Assembly** 40

Chapter 1
Introduction

Join me in an adventure into the heart of one of the most technically advanced instruments serving both law enforcement and private industries. The Intoxilyzer 5000 (Series '68) touts some of the best specifications in the breath alcohol measurement market. This manual will attempt to explain how the I-5000 achieves these remarkable specifications. Instrument operation and software specifics will not be covered in this manual in great detail. This first draft of a '68 series service manual will delve more into circuit explanation, schematic diagrams, bills of materials, block diagrams, and troubleshooting tips. The assumption being that the service technician using this manual will be(and should be) well versed in instrument operation.

Now, without further adieu, let us be on our way...

General Description

Depending on their physical size and structure, molecules absorb light energy of specific frequencies or wavelengths. The Intoxilyzer 5000 capitalizes on this physical phenomenon by measuring the amount of light energy absorbed by alcohol molecules at specific infrared wavelengths. The Intoxilyzer 5000 then converts this absorption measurement to an equivalent breath alcohol concentration. The result is a highly accurate, non invasive means of testing a persons' breath alcohol.

The heart of the Intoxilyzer 5000 is its optical bench. The optical bench consists of a sample chamber, quartz iodide infrared source, cooled lead selenide detector, and separate analog and digital processors to translate the signals into meaningful data. The infrared source is located at one end of the sample chamber while the cooled detector is located at the opposite end. The infrared energy is collimated by a fresnel lens and directed through the sample chamber. The opposite end of the sample chamber uses a similar fresnel lens to re-focus the collimated light through narrow band infrared filters onto the cooled detector. The narrow band infrared filters allow only the wavelengths of interest to pass through to the cooled detector. The signal is then converted by the analog processor to a digital signal which is then converted to an alcohol concentration by the digital processor.

The standard sample sequence begins by establishing a zero point reference. The zero reference is obtained by measuring the amount of infrared energy reaching the detector while the sample chamber is filled with ambient air. During sample introduction, the amount of infrared energy reaching the detector falls as the alcohol in the sample

chamber absorbs part of the infrared energy. The difference between the amount of infrared energy measured during zero reference and the amount measured during sample introduction is translated by the instrument into breath alcohol concentration. To assure accurate test results, the Intoxilyzer 5000 is able to detect other common substances known as interferents which have similar absorption wavelengths to alcohol. The interfering substances are either compensated for or reported in the final test result.

About This Manual

The Intoxilyzer 5000 (Series '68) Service Manual explains the inner workings of a '68 series Intoxilyzer 5000. This manual includes circuit schematics, circuit descriptions, several block diagrams, circuit board maps with associated bills of materials, testing instructions, and troubleshooting tips. This manual will be the ultimate guide to the inner workings of the Intoxilyzer 5000 (Series '68).

Terms and Conventions

This service manual will use certain terms and conventions to refer to specific signals, chips, and other items. Although many of these conventions may seem intuitive, a brief list of terms and assumptions is listed in this section for reference. If this section seems to occupy most of your attention, a call to the CMI service department may be in order. These are some general assumptions:

- When 'Intoxilyzer', '5000', or 'instrument' is referred to in this manual, the instrument referred to is the Intoxilyzer 5000 ('68 Series).
- This manual covers both the 'Gas' and 'Remote Turn-On' options

These are some general conventions:

- All integrated circuits will be referred to as IC's.
- All IC's will be referred to by either reference designator or chip function.
- Each circuit assembly will be contained in a separate chapter.
- A Printed Circuit Board Map details the locations of the components on the board.

Contacting Customer Service

Customer service for CMI can be reached voice at the following telephone numbers or by mail at the following address.

CMI Customer Service Department
316 East 9th Street
Owensboro, KY 42303
TX: 1 (800) 835-0690
FX: 1 (502) 685-6288

If the problem regards instrument failure or similar problems, ask for a technical service representative.

NOTES:

General Description

The switch board assembly is fairly simple and straight forward in both its functionality and design. The switches serve three main functions: data entry for both time and date when a keyboard is not available, type of test selection(i.e. breath, calibration check, custom, etc.), and test characteristics selection(i.e. three digits displayed, print inhibit, etc.). The board consists of five individual slide switches and one DIP style switch that contains eight separate switches. These switches serve different purposes depending on instrument features and software. The slide switches switch to either 5 volts or ground depending on the switch while the DIP switches switch only to ground. The resistors on the board are used for pull-ups on the switches that connect to ground. The switch outputs and the pull-up resistors are located off board.

NOTES:

Schematic

NOTES:

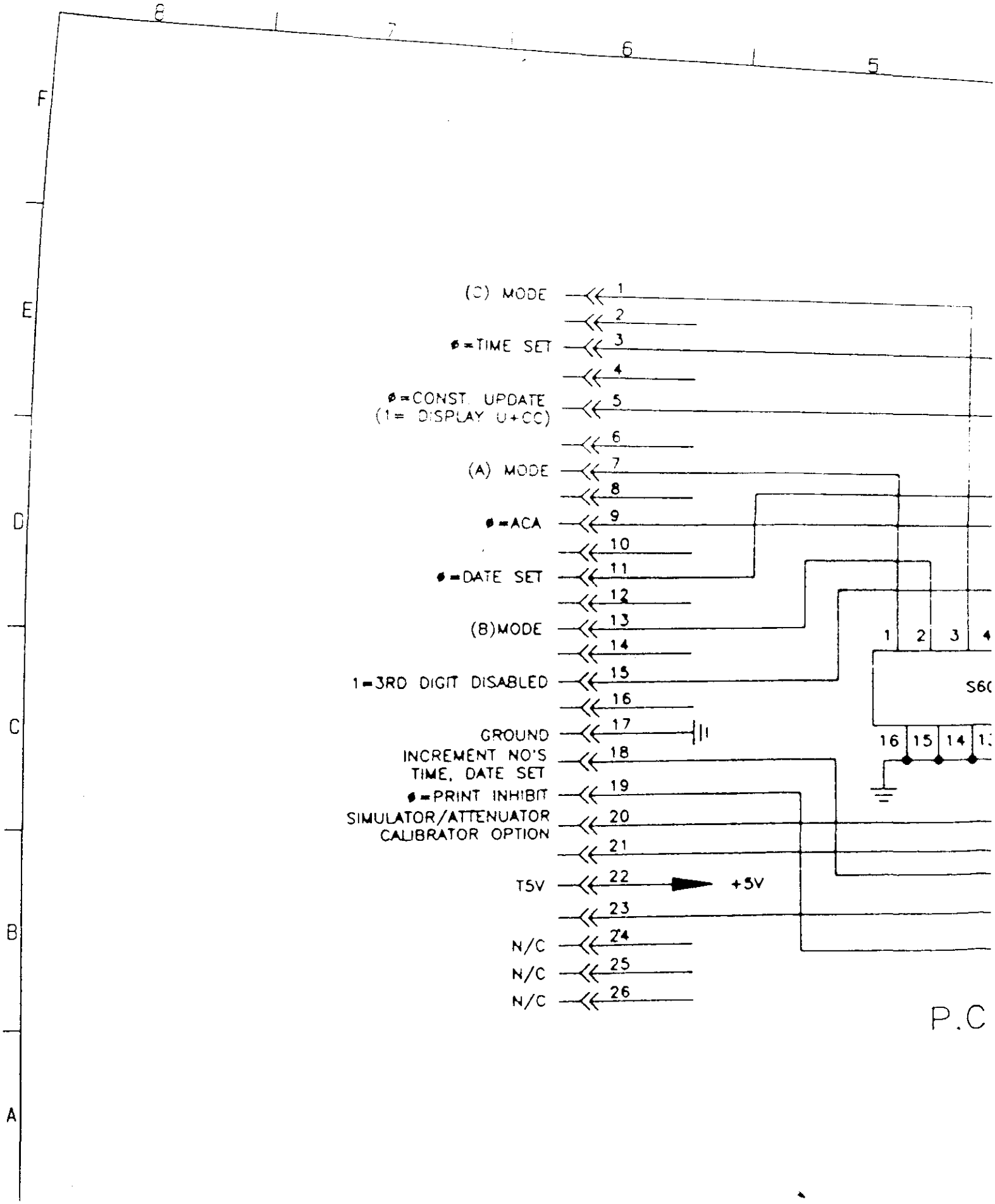
8
7
6
5
F
E
D
C
B
A
(C) MODE
ø=TIME SET
ø=CONST. UPDATE
(1= DISPLAY U+CC)
(A) MODE
ø=ACA
ø=DATE SET
(B)MODE
1=3RD DIGIT DISABLED
GROUND
INCREMENT NO'S
TIME, DATE SET
ø=PRINT INHIBIT
SIMULATOR/ATTENUATOR
CALIBRATOR OPTION
T5V
+5V
N/C
N/C
N/C
1
2
3
4
5
6
7
8
9
10
11
12
13
14
15
16
17
18
19
20
21
22
23
24
25
26
1
2
3
4
16
15
14
S6(
P.C

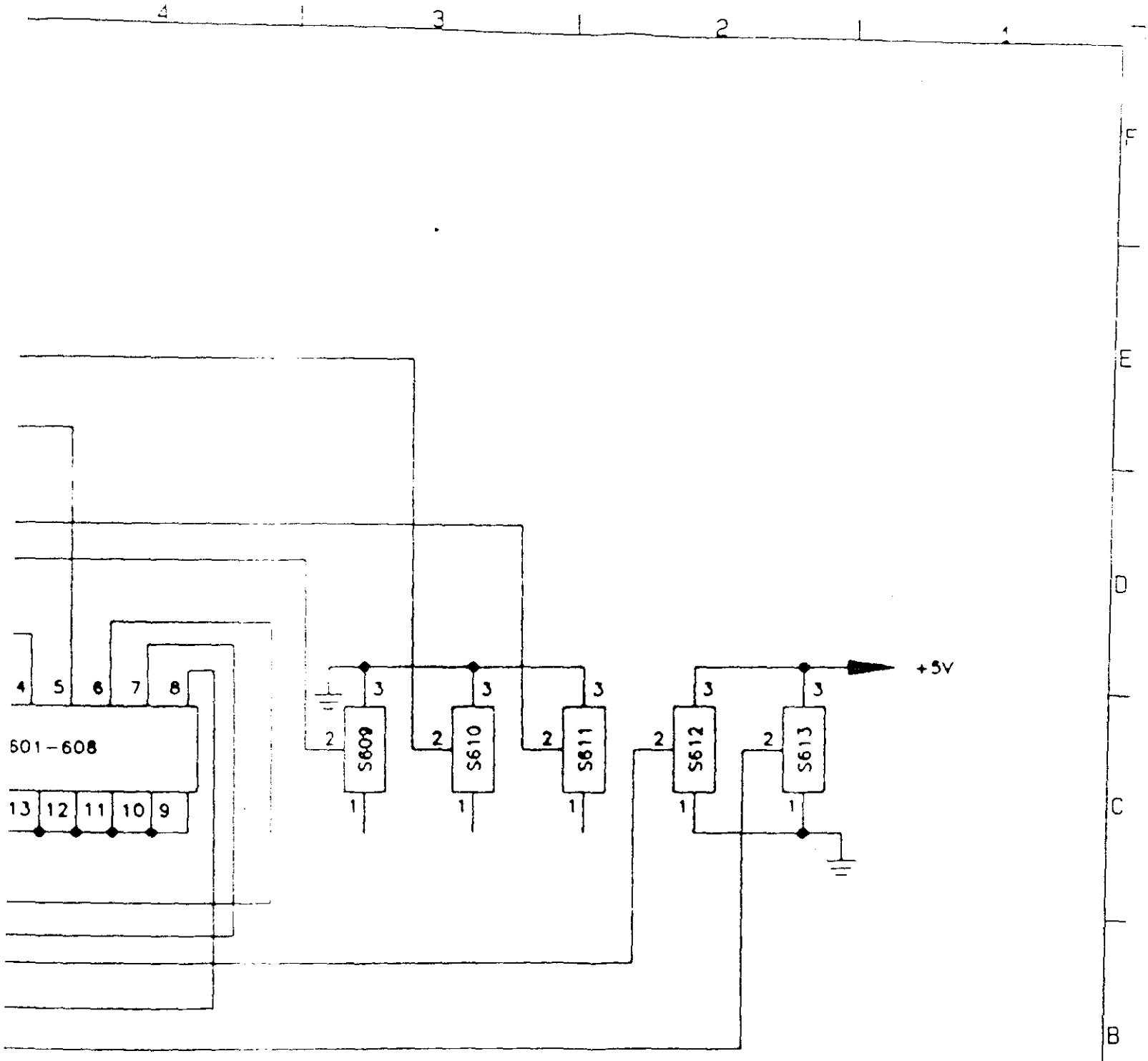

C.B. SCHEMATIC

SIZE	CAGE NO	DWG NO	
B	33173	020867	
SCALE N/A	0883-072	SHEET 3 OF 3	

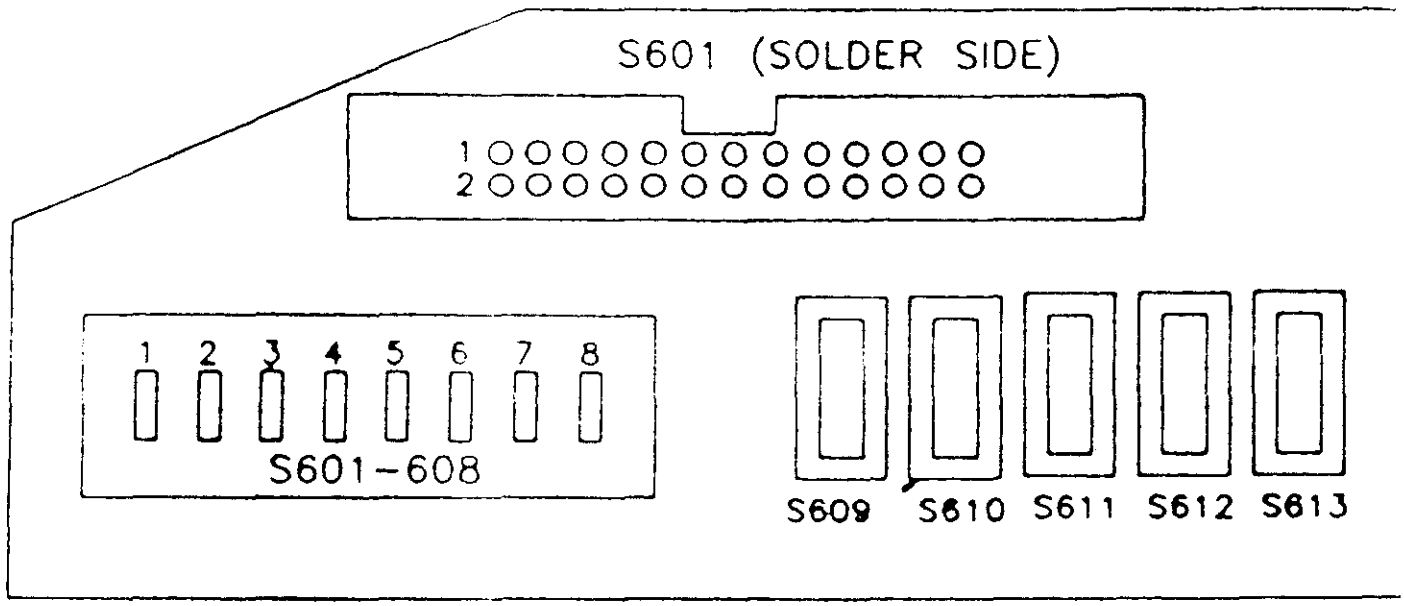
S601 (SOLDER SIDE)
1
2
1 2 3 4 5 6 7 8
S601-608
S609
S610
S611
S612
S613

P.C.B. MAP

SIZE	CAGE NO	DWG NO
B	33173	020867

Bill of Materials

Assembly Number: 020867
Assembly Desc.: PWB ASSY, Switch Function

REFERENCE DESIGNATOR	COMPONENT LOCATION	COMPONENT DESCRIPTION	CMI REPLACEMENT PART NUMBER
S601	E6	HDR,STR 26PIN DUAL ROW,.100CC	320167
S601-608	D8	SWITCH,DIP, 8-SPST	300044
S609	D6	SWITCH,SLIDE,SPDT,PC MT	300037
S610	D6	SWITCH,SLIDE,SPDT,PC MT	300037

Test Procedure/Troubleshooting Tips

NOTES:

General Description

The communications board assembly provides an electronic connection between the I-5000 and external electronic instruments. The external connections provided are: serial communications at 300, 1200, and 2400 baud rates(factory preset), external keyboard connection of either IBM or membrane varieties (IBM is shown), and an optional parallel printer port for an external Centronix compatible printer (if an internal printer is not present). The serial port and keyboard connects to the CPU board assembly through connector P701. Power for the IC's and external keyboard is connected by connector P702. The parallel printer port connects to the CPU board through connector P1 (provided the external printer option is present). Connector J701 is an industry standard 5 pin DIN connector for connecting a standard IBM XT keyboard. Power is provided on pins 4 and 5 of J701 to power the keyboard while pins 1 and 2 are used to clock the information serially back to the CPU board. Pin 2 carries the data while pin one supplies the clock for the synchronous retrieval of the data. Transistor Q1 simply acts as an inverter so that the clock signal reaches the UART in the proper state. Pins 2,3 and 7 of connector J702 are the only ones currently used for asynchronous data communications. Pin 2 is the data transmit line. Pin 3 is the data receive line. Pin 7 connects the remote instruments ground to local ground esablishing a common reference. IC U2 translates the incoming RS-232 level signal to a standard 5 volt digital signal. U2 has a single supply voltage of 5 volts. IC U1 translates the outgoing digital signal to RS-232 levels. U1 has a dual supply of ± 15 volts. There are two unused gates, one of U2 and one of U1. These gates are referenced to either 5 volts or ground so they will not drift or oscillate which could lead to chip failure. The connectors P703, P704 are used for spare +15 volt access points.

NOTES:

Schematic

NOTES:

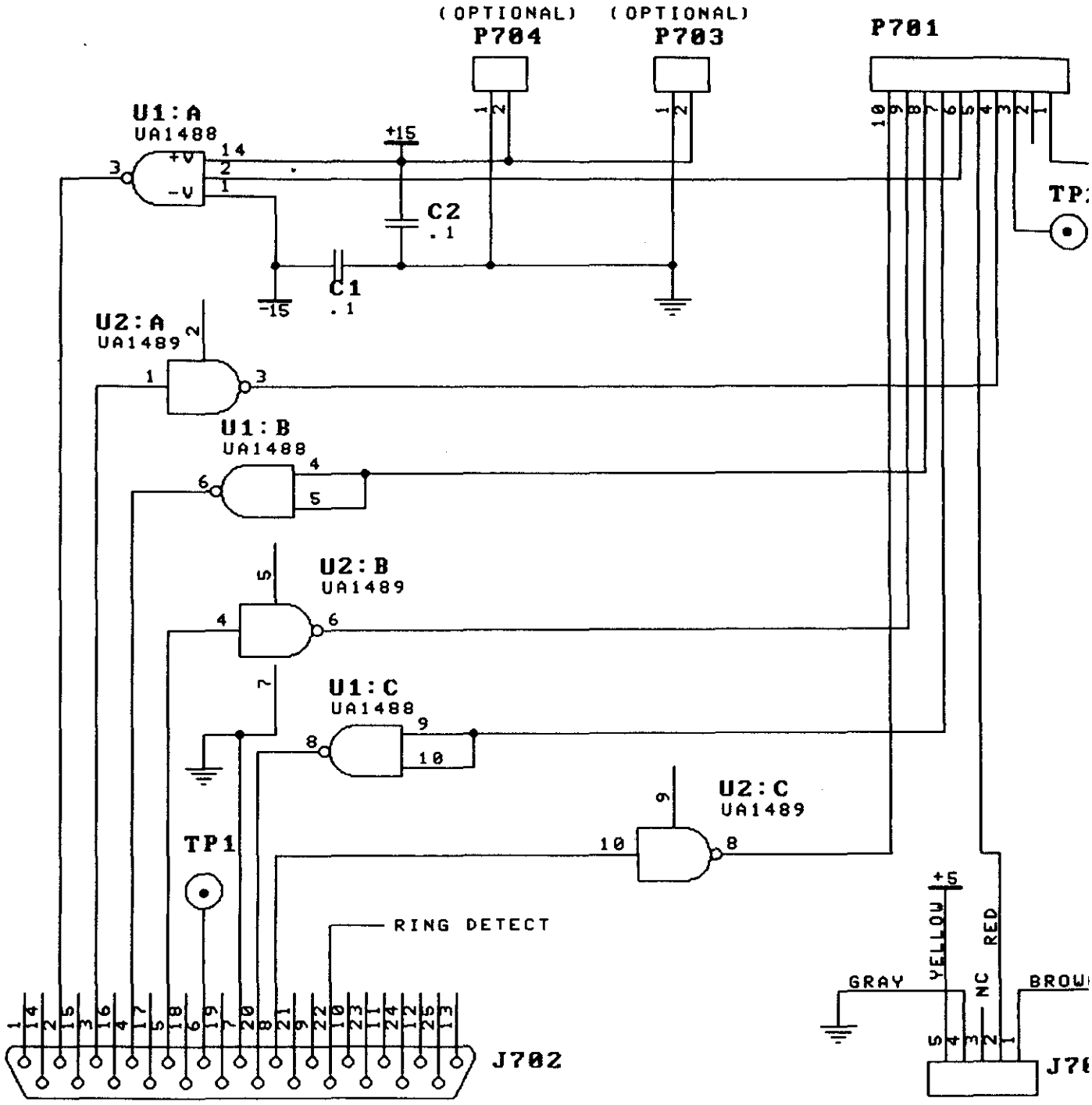
(OPTIONAL)
P704
(OPTIONAL)
P703
P701
U1:A
UA1488
+15
-15
C2
.1
C1
.1
U2:A
UA1489
U1:B
UA1488
U2:B
UA1489
U1:C
UA1488
U2:C
UA1489
TP1
RING DETECT
J702
+5
YELLOW
RED
GRAY
NC
BROW
J7

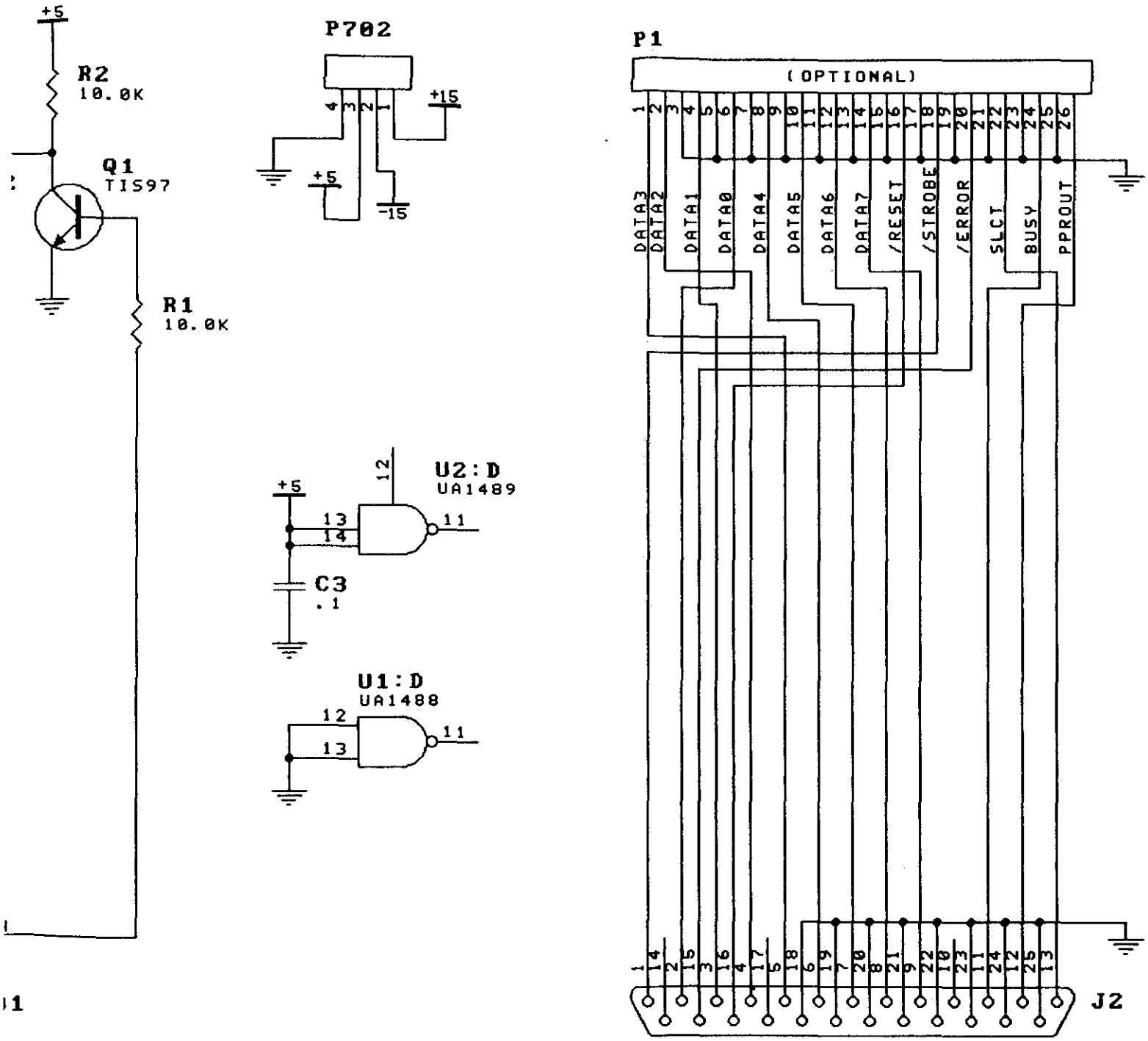

PWB 310167E

EXT PRNTR COMM, 5000
020725 REV J

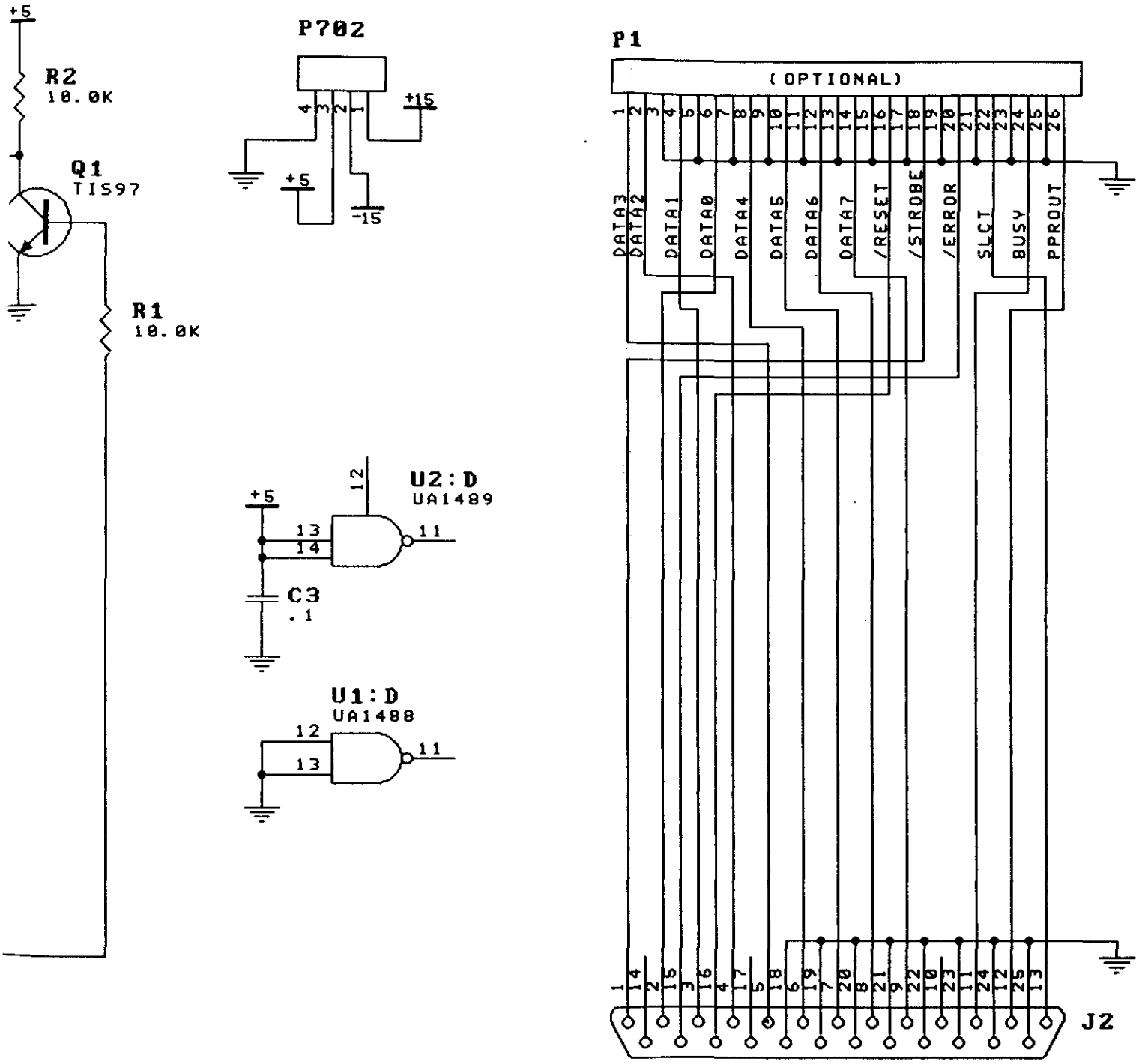

PWB 310167E

EXT PRNTR COMM, 5000
020725 REV J

PWB 310167 PATT E

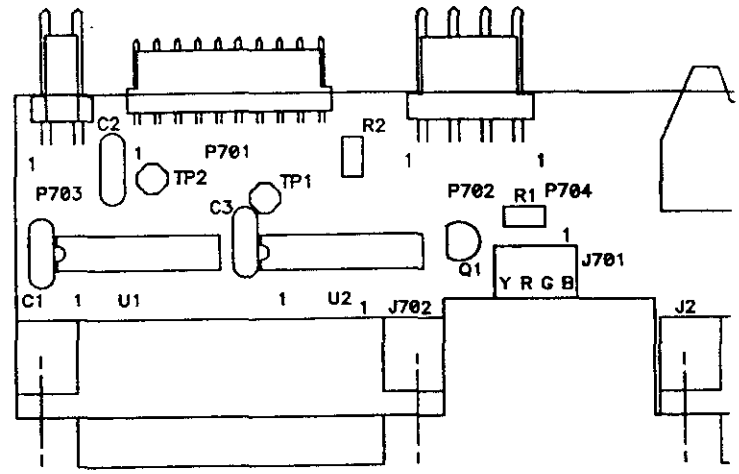

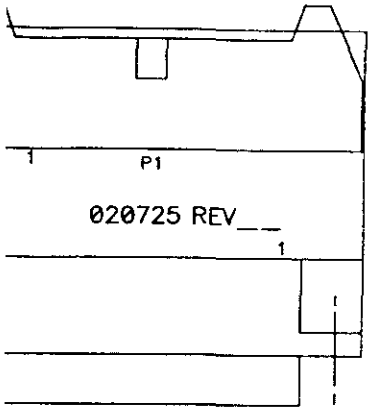

PWB ASSY, EXT PRINTER COMM, 5000
020725 REV J

Bill of Materials

Assembly Number: 020725
Assembly Desc.: PWB ASSY, COMM

REFERENCE DESIGNATOR	COMPONENT LOCATION	COMPONENT DESCRIPTION	CMI REPLACEMENT PART NUMBER
C1	D6	CAP,CER,.1UF,20%,50V	110005
C2	D6	CAP,CER,.1UF,20%,50V	110005
C3	D6	CAP,CER,.1UF,20%,50V	110005
J2	D5	RCPT,R/A,FEM,DB25,BD/PNL MT,AP	320209
J701	D6	RCPT,FEM,DIN,5POS,PNL MT,	320363
J702	D6	RCPT,R/A,FEM,DB25,BD/PNL MT,AP	320209
P1	D5	HDR,R/A 26PIN,LKG,PC MT	320364
P701	D6	HDR,R/A 10 PIN LG,.100CC	320195
P702	D5	HDR,R/A 04PIN LKG,.156CC	320417
P703	D6	HDR,R/A 02PIN,LKG,.156CC	320101
P704	D5	HDR,R/A 02PIN,LKG,.156CC	320101
Q1	D5	XSTR,TIS97	900193
R1	D5	RES,FILM,10K OHM,1/4W,5%	100010
R2	D6	RES,FILM,10K OHM,1/4W,5%	100010
U1	D6	IC,DS1488N,QUAD LINE DRIVER	230035
U2	D6	IC,DS1489N,QUAD LINE RCVR	230036
XU1		SOCKET,IC,14 PIN DIP,.30CC,STR	320181
XU2		SOCKET,IC,14 PIN DIP,.30CC,STR	320181
		BRKT,CONN,KYBD,5000	440460
		LABEL,COM BRKT,5000/866	450137
		NUT,KEP,STL,ZN,#4-40	400021
		PWB,COMM,5000VA/866,PATT E	310167
		SCR,#4-40x.250 PR PNH,STL,ZN	401211
		SCREWLOCK,CONN,AMP P/N207952-1	320211
		TUBING,SHRINK,BLK,3/32Dx1/2LG	910771

Test Procedure/Troubleshooting Tips

NOTES:

EQUIPMENT REQUIREMENTS

- Test Fixture #5000 - 0010.
- Test Cable P701; Test Adapter Cable J701.
- Digital Voltmeter (Keithley 175 Or Equivalent).
- Soldering Iron.

TESTING METHODS

Preliminary Checks/Setup

1. Carefully inspect the communications boards for any obvious problems, such as solder bridges, missing components, reversed components, cold soldered joints, unsoldered joints, etc. Be especially critical of the soldering at the printer connector j2. P1, p703 and p704 will not be installed in go1 board.

2. Verify that u1 is a 1488 ic. And u2 is a 1489 ic. The ic's should be seated correctly in their respective sockets.

3. Verify that the following voltage input lines are not shorted to ground or to each other. (resistance readings may vary with different dvm's).

VOLTAGE (+ LEAD)	GRD.	-15.0V	+15.0V
+15.0 VDC	≈4.0 KΩ	INF.	4.0 MΩ
-15.0 VDC	≈3.5 KΩ	-	3.0 MΩ
+15.0 VDC	≈5.5 KΩ		≈5.5 MΩ

4. Connect the 25 pin connector from the fixture to j702 (rs-232c interface); the 5 pin adapter cable to j701 (keyboard); the test cable p701 to p701; power input cable to p702.

5. Connect the digital voltmeter to the +5.0v test point (positive lead) and the -15.0v test point (negative lead).

Testing Procedure

1. Connect the test fixture power cord to the 120 vac input line. Set the power "on/off" switch to the "on" position. The meter should read +20.0 vdc ± 2.0 vdc.

2. Check that the three switches are in the off position. Leave the black meter lead in the -15.0v test point. Move the red meter lead to the test points j702-2, j702-4 and j702-20. The meter should read less than 1.5 vdc. Switch s1 to the on position. J702-2 should read +30.0 vdc± 2.0 vdc; j702-4 and j702-20 should still read less than 1.5 vdc. Turn s1 off.

3. Turn s2 on. J702-4 should read +30.0 vdc ± 2.0 vdc; j702-2 and j702-20 should read less than 1.5 vdc. Turn s2 off.

4. Turn s3 on. J702-20 should read +30.0 vdc ± 2.0 vdc; j702-2 and j702-4 should read less than 1.5 vdc. Turn s3 off.

5. Connect the digital voltmeter to the tp-2 test point on the board (positive lead) and to ground (negative lead). The voltage at tp-2 should be approximately +5.0vdc. Depress the switch on the keyboard adapter cable. The voltage at tp-2 should go to approximately 0 volts. Release the switch.

6. Set the on/off switch to the "off" position. Remove all connectors from the unit under test. Place a test label near the marking of j701. Record your pay number, the month/year the board passed test and work order number (if known). Place the tested board in a static proof bag before any other handling is performed.

General Description

The internal printer board will be described in sections in an effort to eliminate confusion and to allow concentration only on the effected components. Again, unused gate inputs are tied to ground to prevent oscillation.

Digital Communication

The heart of the digital section is the 8255 parallel input/output(PIO) IC. The 8255 connects to the mother board through a 44 pin edge connector, P305. The arrangement of chip select(CS), write(WR), read(RD), reset(RST), and the data lines (D0-D7) are typical of a chip that is connected directly to the system address/data bus. The 8255 occupies an address whose base is determined by the hardware of the CPU subsystem. The base address, when accessed by the CPU, causes the CS line to be taken low. The latched address lines of A0(Pin 9) and A1(Pin10) determine which port of the PIO is accessed by the request(CS) from the processor. The combination of A0 and A1 produce for distinct addresses that the CPU can access to either read or write data. Three of the addresses are for the three ports(Port A, Port B, and Port C) of the PIO while the forth address is for chip configuration. The chip configuration byte determines whether a port is used as inputs or outputs (or both in the case of port C). The configuration used in the printer board assembly is Ports A and B configured as outputs and Port C configured as half inputs and half outputs. Reset is toggled from high to low in 'power on' conditions to reset the outputs of the ports to default states.

Speaker Driver

The speaker driver circuit is located directly beneath the 8255 in most versions of the internal printer board schematic. Two main circuit paths are distinguishable by tracing the lines from Port C of the 8255 to the separate transistors Q316 and Q318. 8255 Port C, bit 7 (PC7), is used to turn the speakeron or off. This feat is accomplished by sending a digital high or low signal from PC7 to transistor Q316 (which is used as a level shifter). IC U306 is a hex inverter powered by +15 volts and requires logic levels of +15 volts and ground to change the level of the corresponding output. The input to U306, an inverter IC, is switched to either +15 volts or ground depending on the signal from PC7. Resistor R356 acts as a pull-up to +15 volts for the input of U306. The inverter drives a diode, resistor, and capacitor network, which in turn drives transistor Q319, which connects one side of the speaker(on the mother board assembly) to ground. The diode, resistor, and capacitor network provides a ramping of digital output which accounts for the 'soft' attack of the speaker chime. The network prevents the speaker from snapping on and off. The second circuit path starts at PC6 which is connected to

Q318 (which is used as a level shifter). The output of the inverter drives a FET which changes the frequency of the tone generator. The tone generator is comprised of 4 gates of U306, 2 resistors and a capacitor. The nominal frequency of the oscillator is 1 KHZ. This frequency is changed when the resistor R359 is added to the feedback path around one of the inverters. An example of this frequency shifting can be heard during an error condition such as an invalid sample.

Card Present and Left Side Detect

Card present and printer head left side detect are connected to printer sensors through connector P302. Both signals are inputs with card present traveling first through an inverter then into PC1 while left side detect simply has a pull-up resistor to go directly into PC0. The card present signal is generated by an optoreflective sensor located on the printer which senses the presence of a print card. The left side detect signal is generated by a SPST switch which is mechanically activated as the head reaches the left side carriage return position.

Printer Head Drivers

The seven printer head drivers are located near the center of the schematic. Each driver controls one pin of the 7 pin printer head. All seven drivers are identical, so only one is described here. Port A of the 8255 is dedicated to driving FET switches contained in IC's U307 and U308. The bilateral switch chip, 4066, contains four SPST, FET switches used in this application to provide a layer of isolation between the 8255 and the darlington power transistors. When the FET switch is closed, the darlington transistor(Q301) turns on switching one side of the individual print head pin's solenoid to ground through a 2 amp resistor. The other side of the solenoid is connected to +40 volts generated by a separate transformer located opposite the main power supply in the instrument. The result is the printer pin being thrust towards the paper making the familiar impact sound of a dot matrix printer. The 2 amp fuse is intended to save the circuits and/or the print head in the event that a power surge, coil short, or other fault condition should occur.

Stepper Motor Controllers

The two stepper motor control circuits, located on the far right of the schematic, are used to drive both the card feed stepper motor and the head position stepper motor of the internal printer. The basic concept of a stepper motor is that it can be rotated in steps either clock wise or counter clockwise. Each motor has two coils which are center tapped. The center tap is connected to ground on each coil of the motor. By alternately connecting power to one side of the coil or the other, the motor can be made to 'step' in one direction. The size of the step is usually measured in degrees of outward rotation or 360 degrees which would be a complete rotation. With this basic understanding of the stepper motor, the drive circuit can be more easily described. Port B of the 8255 is used to control both stepper motors. Only one of the stepper motor drive circuits is described here since both are identical. Each pin of Port B drives an inverter(U304, U305) which in turn drives a comparator. The inverter is used to buffer the signal into the comparator. The comparator is used as a level translator because a high digital signal (+

5 volts) on the output of the inverter will provide a -15 volt signal at the output of the comparator. A low digital signal on the output of the inverter will (thanks to the resistor network connected between the inverting input of the comparator and the output of the comparator) result in a +15 volt signal on the output of the comparator. The output of the comparator is used to hard drive darlington power transistors which connect either side of the center tapped stepper motor coil to -15 volts. The diode and resistor combination connected to each of the printer coil are used to dissipate the power remaining in the coils when the coil is turned off. This 'free-wheeling' configuration prevents the surge current from destroying the PN junction in the power darlingtons.

NOTES:

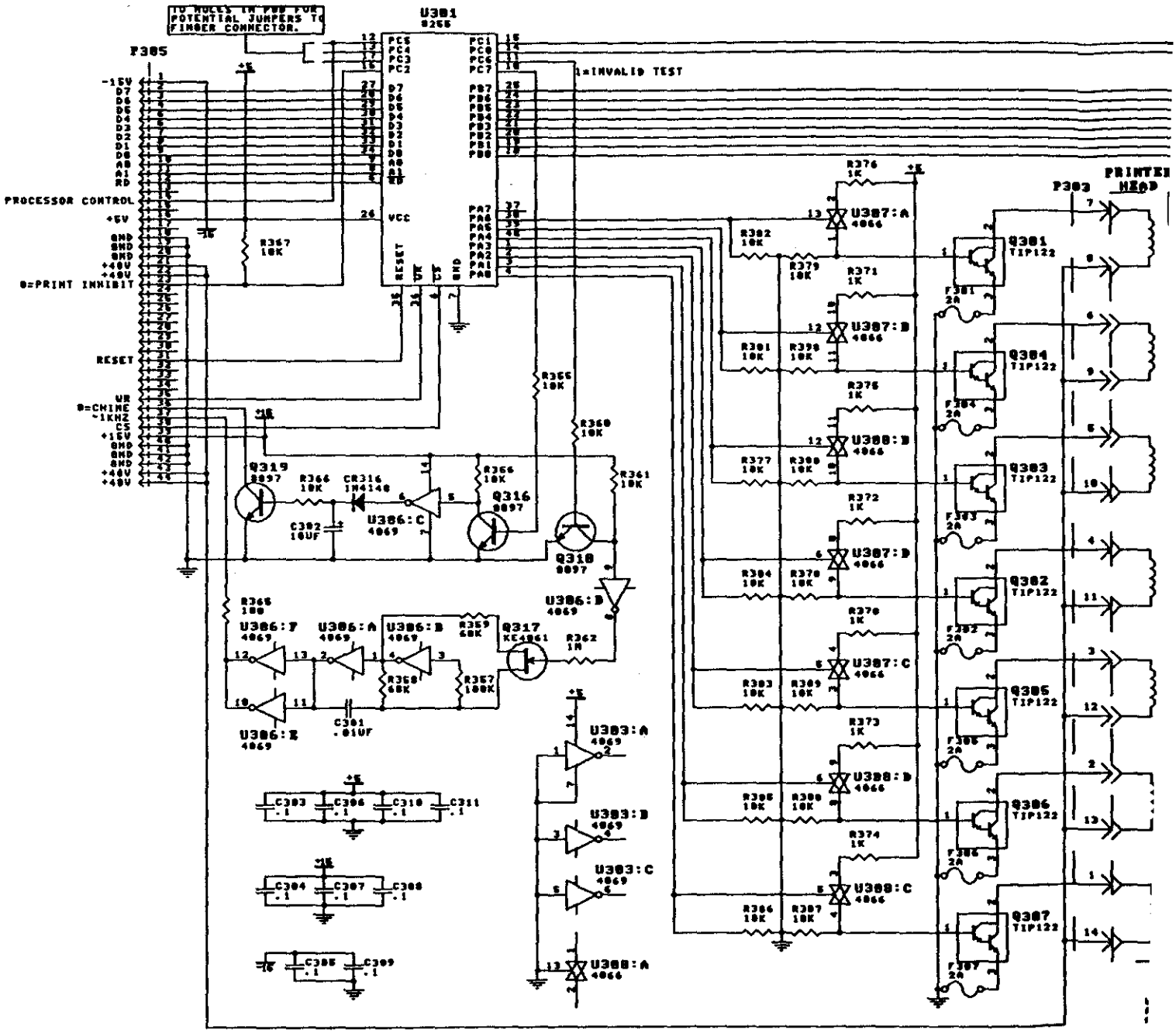
TO HOLES IN PCB FOR POTENTIAL JUMPERS TO FINGER CONNECTOR.
U301
8255
P305
PROCESSOR CONTROL
0=PRINT INHIBIT
RESET
0=CHINE
~1KHZ
1=INVALID TEST
P303
PRINTER HEAD
Q301 TIP122
Q302 TIP122
Q303 TIP122
Q304 TIP122
Q305 TIP122
Q306 TIP122
Q307 TIP122
Q316 8097
Q317 KE4861
Q318 8097
Q319 8097
U386:C 4069
U386:D 4069
U386:F 4069
U386:A 4069
U386:B 4069
U386:E 4069
U383:A 4069
U383:B 4069
U383:C 4069
U388:A 4066
U387:A 4066
U387:B 4066
U388:B 4066
U387:D 4066
U387:C 4066
U388:D 4066
U389:C 4066
CR316 1N4148

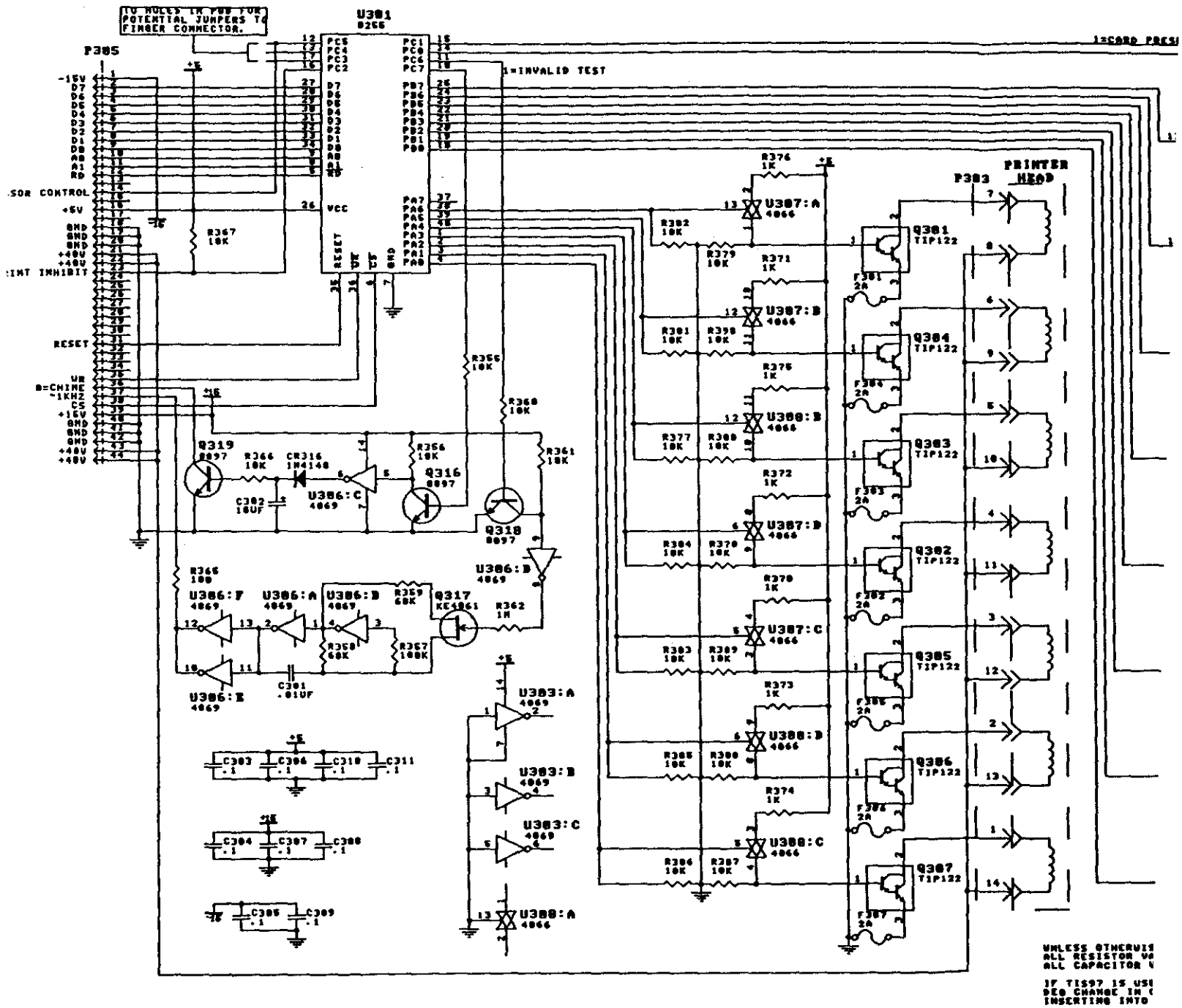
TO HOLES IN PWB FOR POTENTIAL JUMPERS TO FINGER CONNECTOR.
U301
8255
P305
1=INVALID TEST
1=CARD PRES
PRINTER HEAD
P303
Q301 TIP122
Q304 TIP122
Q303 TIP122
Q302 TIP122
Q305 TIP122
Q306 TIP122
Q307 TIP122
U307:A 4066
U307:B 4066
U308:B 4066
U307:D 4066
U307:C 4066
U308:D 4066
U308:C 4066
U308:A 4066
U303:A 4069
U303:B 4069
U303:C 4069
U306:C 4069
U306:B 4069
U306:F 4069
U306:A 4069
U306:D 4069
U306:E 4069
Q319 8097
Q316 8097
Q318 8097
Q317 KE4061
CR316 1N4148
RESET
WR
B=CHIME
~1KHZ
CS
+15V
GND
+40V
-15V
+5V
R367 10K
R355 10K
R360 10K
R361 10K
R366 10K
R356 10K
R362 1M
R359 68K
R358 68K
R357 100K
R365 100
C302 10UF
C301 .01UF
C303 .1
C306 .1
C310 .1
C311 .1
C304 .1
C307 .1
C308 .1
C305 .1
C309 .1
R376 1K
R371 1K
R375 1K
R372 1K
R370 1K
R373 1K
R374 1K
R382 10K
R379 10K
R381 10K
R398 10K
R377 10K
R380 10K
R384 10K
R370 10K
R383 10K
R389 10K
R385 10K
R380 10K
R386 10K
R387 10K
F301 2A
F304 2A
F303 2A
F302 2A
F305 2A
F306 2A
F307 2A
UNLESS OTHERWIS
ALL RESISTOR VA
ALL CAPACITOR V
IF TIS97 IS USE
DEG CHANGE IN C
INSERTING INTO

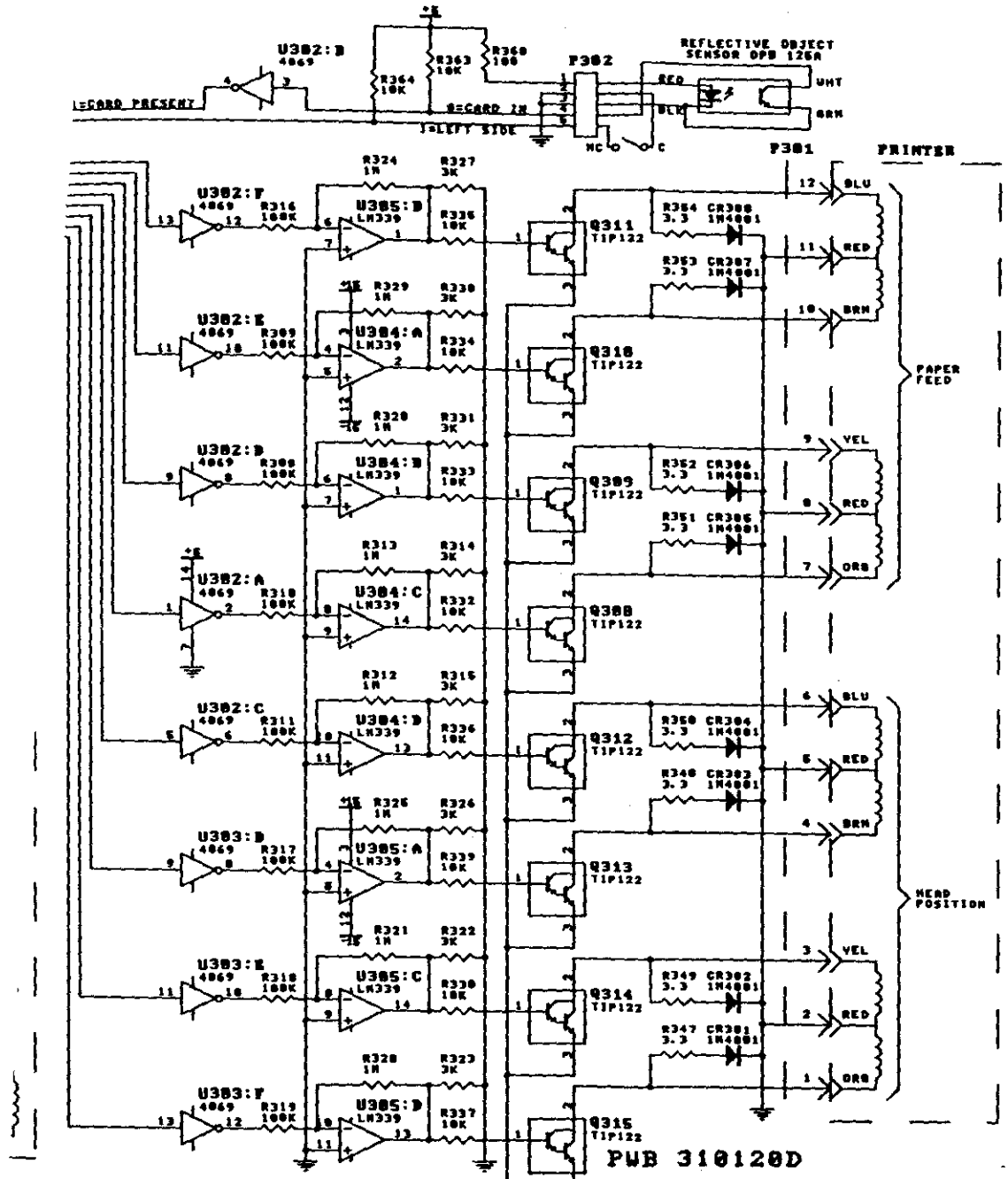

PWB 310120D

PRINTER BOARD,5000
020524 SH 3, REV V

UNLESS OTHERWISE SPECIFIED:
ALL RESISTOR VALUES ARE IN OHMS +/-5%, 1/4W.
ALL CAPACITOR VALUES ARE IN MICROFARADS.

IF TIS97 IS USED INSTEAD OF MPS8097, AN 180 DEG CHANGE IN ORIENTATION IS REQUIRED WHEN INSERTING INTO BOARD.

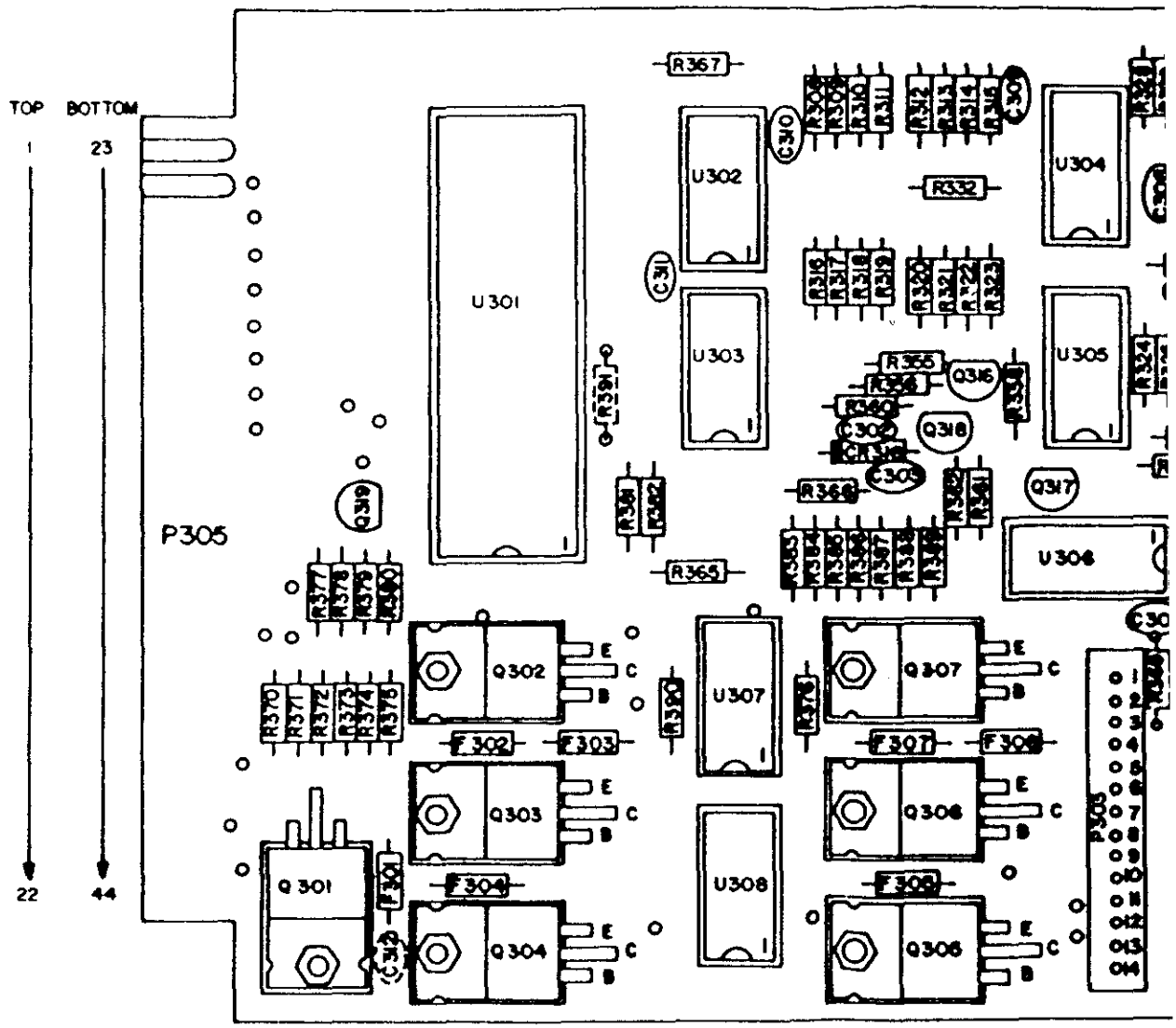
TOP
BOTTOM
1
23
22
44
P305
U301
U302
U303
U304
U305
U306
U307
U308
Q301
Q302
Q303
Q304
Q306
Q307
Q308
Q316
Q317
Q318
Q319
F301
F302
F303
F304
F305
F306
F307
F308
R367
R332
R355
R356
R360
R361
R362
R363
R364
R365
R366
R368
R369
R370
R371
R372
R373
R374
R375
R376
R377
R378
R379
R380
C310
C311
C312
C313
C314
C315
C316
C317
C318
C319
C320
C321
C322
C323
C324
C325
C326
C327
C328
C329
C330
C331
C332
C333
C334
C335
C336
C337
C338
C339
C340
C341
C342
C343
C344
C345
C346
C347
C348
C349

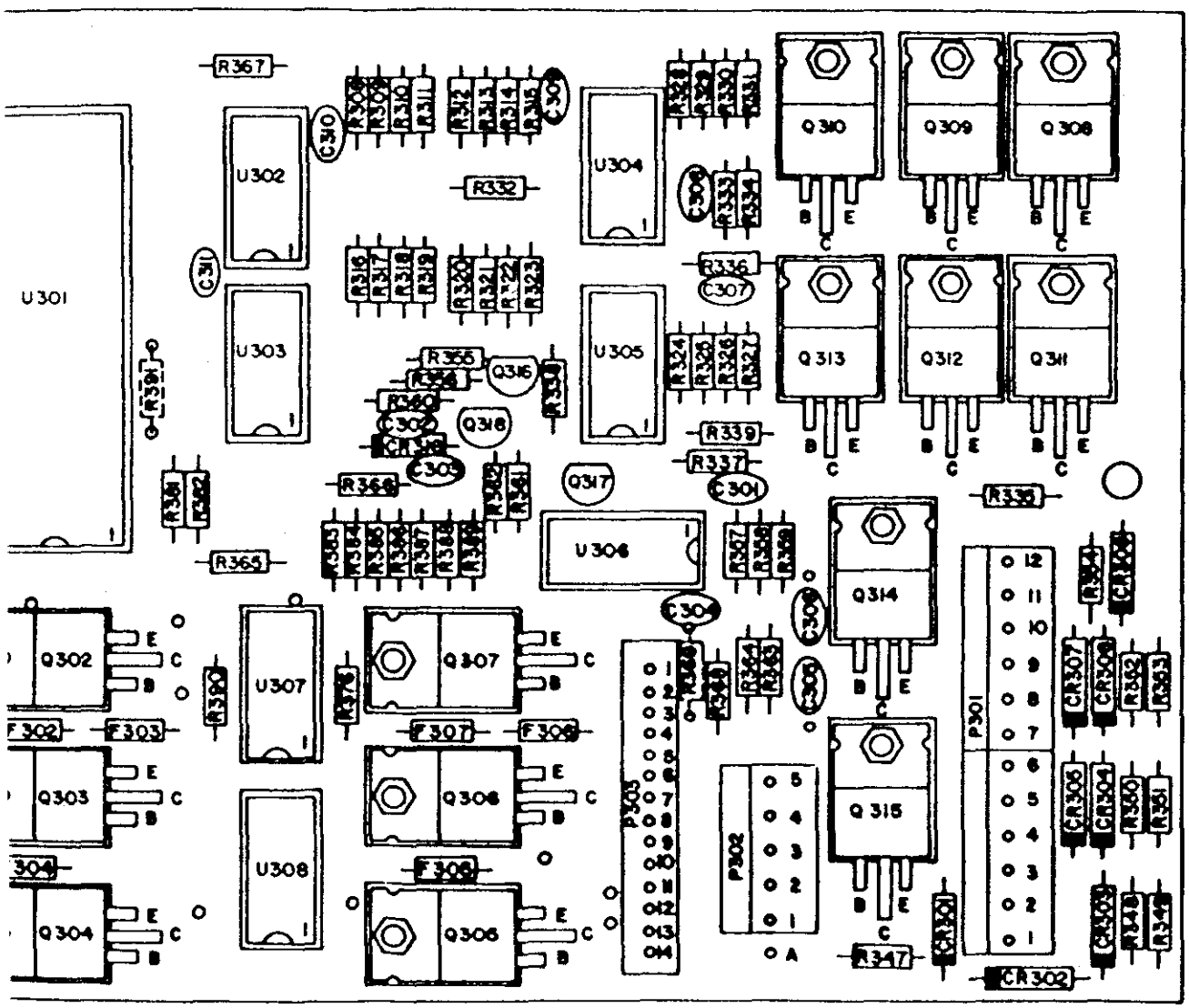

PCB 310120 D

0 'C' SEE OBSOLETE DRAWING 020524 B

NOTE
THIS DRAWING SHOWS THE USE OF MOTOROLA MPS8097 AND MPS8093 TRANSIS
IF REPLACED BY TIS97 AND TIS93, RESPECTIVELY, THE FLAT SIDE MUST BE
180° WHEN INSTALLED.

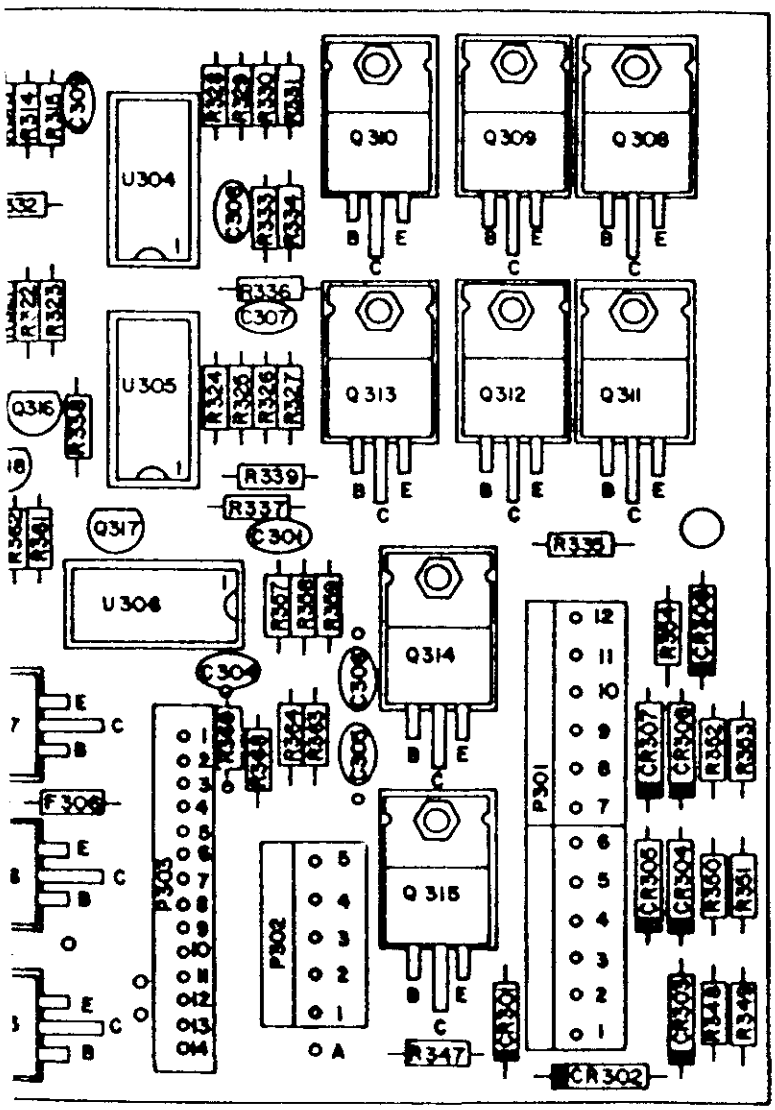

PCB 310120 D

NOTE
THIS DRAWING SHOWS THE USE OF MOTOROLA MPS8097 AND MPS8093 TRANSISTORS. IF REPLACED BY TIS97 AND TIS93, RESPECTIVELY, THE FLAT SIDE MUST BE ROTATED 180° WHEN INSTALLED.

Bill of Materials

Assembly Number: 020524
Assembly Desc.: PWB ASSY, Printer

REFERENCE DESIGNATOR	COMPONENT LOCATION	COMPONENT DESCRIPTION	CMI REPLACEMENT PART NUMBER
C301	D4	CAP,CER,.01UF,CK05BX103K	110037
C302	D4	CAP,TANT,10UF=/-20%,35V	110030
C303	D4	CAP,CER,.1UF,20%,50V	110005
C304	C4	CAP,CER,.1UF,20%,50V	110005
C305	C3	CAP,CER,.1UF,20%,50V	110005
C306	C3	CAP,CER,.1UF,20%,50V	110005
C307	D4	CAP,CER,.1UF,20%,50V	110005
C308	E4	CAP,CER,.1UF,20%,50V	110005
C309	E4	CAP,CER,.1UF,20%,50V	110005
C310	E5	CAP,CER,.1UF,20%,50V	110005
C311	D5	CAP,CER,.1UF,20%,50V	110005
CR301	B3	DIODE,1N4001	210002
CR302	B3	DIODE,1N4001	210002
CR303	B3	DIODE,1N4001	210002
CR304	B3	DIODE,1N4001	210002
CR305	B3	DIODE,1N4001	210002
CR306	C3	DIODE,1N4001	210002
CR307	C3	DIODE,1N4001	210002
CR308	C3	DIODE,1N4001	210002
CR316	D4	DIODE,1N4148	210001
F301	B6	FUSE,PICO,2AMP,#276002	140038
F302	C6	FUSE,PICO,2AMP,#276002	140038
F303	C5	FUSE,PICO,2AMP,#276002	140038
F304	B6	FUSE,PICO,2AMP,#276002	140038
F305	B4	FUSE,PICO,2AMP,#276002	140038
F306	C4	FUSE,PICO,2AMP,#276002	140038
F307	C4	FUSE,PICO,2AMP,#276002	140038
P303	BC4	HDR,STR 08PIN FLAT,.100CC	320084
P303	BC4	HDR,STR,06 FLAT,.100CC	320100
P301(2)	BC3	HDR,STR 06PIN FLAT,.156CC	320014
P302	B4	HDR,STR 05PIN LKG,.156CC,BRKY	320027
Q301	B6	XSTR,TIP122,DAR PAIR	200038
Q302	C5	XSTR,TIP122,DAR PAIR	200038
Q303	C5	XSTR,TIP122,DAR PAIR	200038
Q304	B5	XSTR,TIP122,DAR PAIR	200038
Q305	B4	XSTR,TIP122,DAR PAIR	200038
Q306	C4	XSTR,TIP122,DAR PAIR	200038
Q307	C4	XSTR,TIP122,DAR PAIR	200038
Q308	E3	XSTR,TIP122,DAR PAIR	200038
Q309	E3	XSTR,TIP122,DAR PAIR	200038
Q310	E3	XSTR,TIP122,DAR PAIR	200038
Q311	D3	XSTR,TIP122,DAR PAIR	200038
Q312	D3	XSTR,TIP122,DAR PAIR	200038
Q313	D3	XSTR,TIP122,DAR PAIR	200038
Q314	C3	XSTR,TIP122,DAR PAIR	200038
Q315	B3	XSTR,TIP122,DAR PAIR	200038
Q316	D4	XSTR,TIS97	900193

Q317	D4	XSTR,4861,JFET	200026
Q318	D4	XSTR,TIS97	900193
Q319	D6	XSTR,TIS97	900193
R308	E5	RES,FILM,100K OHM,1/4W,5%	100014
R309	E5	RES,FILM,100K OHM,1/4W,5%	100014
R310	E4	RES,FILM,100K OHM,1/4W,5%	100014
R311	E4	RES,FILM,100K OHM,1/4W,5%	100014
R312	E4	RES,FILM,1 MEG OHM,1/4W,5%	100017
R313	E4	RES,FILM,1 MEG OHM,1/4W,5%	100017
R314	E4	RES,FILM,3K OHM,1/4W,5%	100059
R315	E4	RES,FILM,3K OHM,1/4W,5%	100059
R316	D5	RES,FILM,100K OHM,1/4W,5%	100014
R317	D5	RES,FILM,100K OHM,1/4W,5%	100014
R318	D4	RES,FILM,100K OHM,1/4W,5%	100014
R319	D4	RES,FILM,100K OHM,1/4W,5%	100014
R320	D4	RES,FILM,1 MEG OHM,1/4W,5%	100017
R321	D4	RES,FILM,1 MEG OHM,1/4W,5%	100017
R322	D4	RES,FILM,3K OHM,1/4W,5%	100059
R323	D4	RES,FILM,3K OHM,1/4W,5%	100059
R324	D4	RES,FILM,1 MEG OHM,1/4W,5%	100017
R325	D4	RES,FILM,1 MEG OHM,1/4W,5%	100017
R326	D4	RES,FILM,3K OHM,1/4W,5%	100059
R327	D4	RES,FILM,3K OHM,1/4W,5%	100059
R328	E4	RES,FILM,1 MEG OHM,1/4W,5%	100017
R329	E4	RES,FILM,1 MEG OHM,1/4W,5%	100017
R330	E4	RES,FILM,3K OHM,1/4W,5%	100059
R331	E3	RES,FILM,3K OHM,1/4W,5%	100059
R332	E4	RES,FILM,10K OHM,1/4W,5%	100010
R333	E4	RES,FILM,10K OHM,1/4W,5%	100010
R335	E3	RES,FILM,10K OHM,1/4W,5%	100010
R335	D3	RES,FILM,10K OHM,1/4W,5%	100010
R336	D4	RES,FILM,10K OHM,1/4W,5%	100010
R337	D4	RES,FILM,10K OHM,1/4W,5%	100010
R338	D4	RES,FILM,10K OHM,1/4W,5%	100010
R339	D4	RES,FILM,10K OHM,1/4W,5%	100010
R339		RES,FILM,10K OHM,1/4W,5%	100010
R347	B3	RES,FILM,3.3 OHM,1/4W,5%	100066
R348	B2	RES,FILM,3.3 OHM,1/4W,5%	100066
R349	B2	RES,FILM,3.3 OHM,1/4W,5%	100066
R350	B2	RES,FILM,3.3 OHM,1/4W,5%	100066
R351	B2	RES,FILM,3.3 OHM,1/4W,5%	100066
R352	C2	RES,FILM,3.3 OHM,1/4W,5%	100066
R353	C2	RES,FILM,3.3 OHM,1/4W,5%	100066
R354	C3	RES,FILM,3.3 OHM,1/4W,5%	100066
R355	D4		
R356	D4	RES,FILM,10K OHM,1/4W,5%	100010
R357	C4	RES,FILM,100K OHM,1/4W,5%	100014
R358	C3	RES,FILM,68K OHM,1/4W,5%	100013
R359	C3	RES,FILM,68K OHM,1/4W,5%	100013
R360	D4	RES,FILM,10K OHM,1/4W,5%	100010
R361	D4	RES,FILM,10K OHM,1/4W,5%	100010
R362	D4	RES,FILM,1 MEG OHM,1/4W,5%	100017
R363	C3	RES,FILM,10K OHM,1/4W,5%	100010
R364	C4	RES,FILM,10K OHM,1/4W,5%	100010
R365	C5	RES,FILM,180 OHM,1/4W,5%	100018

R366	D5	RES,FILM,10K OHM,1/4W,5%	100010
R367	E5	RES,FILM,10K OHM,1/4W,5%	100010
R368	C4	RES,FILM,100 OHM,1/4W,5%	100001
R369	C4		
R370	C6	RES,FILM,1K OHM,1/4W,5%	100006
R371	C6	RES,FILM,1K OHM,1/4W,5%	100006
R372	C6	RES,FILM,1K OHM,1/4W,5%	100006
R373	C6	RES,FILM,1K OHM,1/4W,5%	100006
R374	C6	RES,FILM,1K OHM,1/4W,5%	100006
R375	C6	RES,FILM,1K OHM,1/4W,5%	100006
R376	C5	RES,FILM,1K OHM,1/4W,5%	100006
R377	C6	RES,FILM,10K OHM,1/4W,5%	100010
R378	C6	RES,FILM,10K OHM,1/4W,5%	100010
R379	C6	RES,FILM,10K OHM,1/4W,5%	100010
R380	C6	RES,FILM,10K OHM,1/4W,5%	100010
R381	D5	RES,FILM,10K OHM,1/4W,5%	100010
R382	D5	RES,FILM,10K OHM,1/4W,5%	100010
R383	C5		
R384	C5	RES,FILM,10K OHM,1/4W,5%	100010
R385	C5	RES,FILM,10K OHM,1/4W,5%	100010
R386	C5	RES,FILM,10K OHM,1/4W,5%	100010
R387	C4	RES,FILM,10K OHM,1/4W,5%	100010
R388	C4	RES,FILM,10K OHM,1/4W,5%	100010
R389	C4	RES,FILM,10K OHM,1/4W,5%	100010
R390	C5	RES,FILM,10K OHM,1/4W,5%	100010
U301	D5	IC,8255A-5 PPI I/O PORT	220089
U302	E5	IC,CD4069BE,NATIONAL ONLY	220056
U303	D5	IC,CD4069BE,NATIONAL ONLY	220056
U304	E4	IC,LM339,QUAD VOLT COMPARATOR	220036
U305	D4	IC,LM339,QUAD VOLT COMPARATOR	220036
U306	C4	IC,CD4069BE,NATIONAL ONLY	220056
U307	C5	IC,4066,QUAD BILATERAL SWITCH	220070
U308	B5	IC,4066,QUAD BILATERAL SWITCH	220070
XU301	D5(U301)	SOCKET,IC,40 PIN DIP,.60CC,STR	320178
XU302	E5(U302)	SOCKET,IC,14 PIN DIP,.30CC,STR	320181
XU303	D5(U303)	SOCKET,IC,14 PIN DIP,.30CC,STR	320181
XU304	E4(U304)	SOCKET,IC,14 PIN DIP,.30CC,STR	320181
XU305	D4(U305)	SOCKET,IC,14 PIN DIP,.30CC,STR	320181
XU306	C4(U306)	SOCKET,IC,14 PIN DIP,.30CC,STR	320181
XU307	C5(U307)	SOCKET,IC,14 PIN DIP,.30CC,STR	320181
XU308	B5(U308)	SOCKET,IC,14 PIN DIP,.30CC,STR	320181
		INSULATOR,TO220	470085
		NUT,HEX,STL,ZN,#2-56	400004
		PWB,PRINTER,REPL,5000	310120
		SCR,#2-56x.375 PR RDH,STL,ZN	401011

EQUIPMENT REQUIREMENTS

- Test 5000 Intoxilyzer With Tested Boards.
- Digital Voltmeter (Keithley 175 Or Equivalent). Purposes Only.
- Oscilloscope (Hitachi V202 Or Equivalent) Purposes Only.
- X10 Scope Probe.
- Test Software 46.01.
- Printer Cards 015010.
- Tags And Label As Required.

TESTING METHODS

Preliminary Checks/Setup

Carefully inspect the printer boards for any obvious problems, such as solder bridges, missing components, reversed components, cold soldered joints, unsoldered joints, excessive flux residue around the 8255 i.c., Etc...

1. Verify that all i.c.'s are the correct ones and oriented properly.

2. Carefully insert the printer boards into j101 on the mother board.

3. Connect the printer cables into p301, p302, and p303.

4. All switches on the switch board should be in the "down" position.

Testing Procedure.

Turn power on.

Note: if there is a noticeable power supply squeal or if the i.r. Source is not lit, turn power off and troubleshoot the various input power busses to the board.

1. The display should read "ready to test: the printer will move to the right if it is not positioned there at the beginning of the test.

2. Depress the start test switch. The display will show "ps on at tone" and a constant frequency tone will be heard. Activate the pressure switch either manually or by blowing into the cell chamber tubing. The display will show "turn ps off". Then "ps on at tone" again after the pressure switch is deactivated. The constant tone should be a higher pitch than the tone heard at the initial "ps on at tone" mode. Blow into the cell tubing again to turn tone off.

3. Whenever the display reads "print inhibit on" set switch s613 on the switch board to the "up" position. "print inhibit of" will be displayed. Switch s613 up and down until "turn head switch on" is displayed. Operate the cherry switch lever up and down and verify that the display will indicate that the "head switch is off", then "on", then "off".

4. The display should read "insert card" now. Verify that the printer feed motor is turning smoothly and not chattering excessively. Insert the printer card into the printer slot. The card should advance smoothly and evenly into the printer.

5. A print test will now be performed. The printer head should travel across the printer in a fairly smooth fashion. After the print test is completed, the printer card should be expelled smoothly and not twist or turn greatly.

6. Inspect all printed information for completeness and good printed quality. Any problems areas will show up as missing dashes after the seven printer head driver stages q307 through q301.

7. Turn power off. Remove the three printer cables from board. Do not remove the board from j101 until the +40 vdc line has been discharged to less than +5.0 vdc! Damage can occur to the finger contacts if the +40 vdc line is not discharged!

8. Remove the printer board from j101. Place a test label near q308. Record your initials and the month/year the board passed test. Place the tested board in a static-proof bag, container or carrier before any other handling performed.

General Description

The controller board assembly is the home of the slave microcontroller which handles all signals retrieved from the IR optical bench. The functions of the controller board are: toggling the sample and hold pulses used on the analog processor board, communicating information retrieved from the optical bench to the host CPU subsystem, maintaining calibration information which is stored on the analog processor board, writing to the DAC on the analog processor board, and reading from the AtoD converter on the analog processor board. A description of the functions of each digital IC and how they fit in the grand scheme of things follows:

The IC labeled U1(74HC245) is an octal, tri-stated non-inverting, bi-directional bus transceiver. The basic function of this chip is to buffer the data moving to and from the analog processor board as the DAC and the AtoD are accessed. If the DAC is written to or the AtoD is read from, the transceiver is selected and told which process (read or write) is taking place. All other chip accesses, which cause the address/data lines to always be active, are prevented from reaching the analog processor board because it is susceptible to this digital 'noise'. The DIR input(Pin 1) controls the direction of data and is tied to RD. When the AtoD is accessed on the analog processor board, RD transitions low, changing the direction of data so that information can be read from the AtoD converter. The input labeled 'G' is a gate input whose signal is generated by the AND gate whose inputs are the DAC and AtoD chip selects. The AND gate prevents all but the DAC and AtoD chip selects from enabling the transceiver which prevents digital 'noise' from reaching the analog processor board at critical times.

The chip labeled U2(8255) is a parallel input/output(PIO) interface IC. The PIO chip serves as the communication link between the host CPU subsystem and the slave microcontroller located in this assembly. The arrangement of chip select(CS), write(WR), read(RD), reset(RST), and the data lines (D)-D7) are typical of a chip that is connected directly to the system address/data bus. The 8255 occupies an address whose base is determined by the hardware of the CPU subsystem. The base address, when accessed by the CPU, causes the CS line to be taken low. The latched address lines of A0(Pin 9) and A1(Pin10) determine which port of the PIO is accessed by the request(CS) from the processor. The combinations of A0 and A1 produce four distinct addresses that the CPU can access to either read or write data. Three of the addresses are for the three ports(Port A, Port B, and Port C) of the PIO while the forth address is for chip configuration. The chip configuration byte determines whether a port is used as inputs or outputs or both in the case of port C. In this configuration, port A is used to

communicate byte information to the host CPU. Port C is used as flow control for the bytes either transmitted or received through port A. Reset is toggled from high to low in 'power on' conditions to reset the outputs of the ports to default states.

The chip labeled U3(8051AH) is an 8-bit microcontroller more commonly known throughout this manual as the slave processor. The 8051 provides the brains for all functions of the optical bench. The 8051's subsystem consists of separate ROM and RAM chips as well as communication chips. The 8051 maintains the operations of the optical bench while waiting for information requests from the host processor. Ports 0 and 2 of the 8051 comprise the eternal address/data bus. Port 1 handles the sample and hold pulses sent to the analog processor board as well as the transmission of calibration data which is stored in the analog processor boards eeprom. Port 3 is the special functions port from which both read(RD) and write(WR) originate. Port 3 also handles incoming interrupts from either the PIO or the analog processor board. Other chip inputs consist of crystal inputs for a 12 Mhz crystal and a reset line used to reset the chip on power up.

The chip labeled U4(74HC373) is an octal, tri-stated, non-inverting transparent latch. The 8051 architecture requires Port 0 to be shared between the bottom 8 address bits and the data bus. For accessing peripheral chips to work, the address of the peripheral chip must be maintained while the data is either being read from or written to the chip. The upper address lines are held constant by Port 2 which is dedicated to the task of addressing. The lower address lines, however, must be latched without interrupting data which is to be read into or written from Port 0. The transparent latch, U4, accomplishes this task.

The chip labeled U5(27c512) is a 64K byte eprom which may be erased with ultraviolet light of sufficient intensity. The eprom chip stores the program which the 8051 executes. The eprom is accessed by the 8051 through the use of the signals PSEN and ALE. The transparent latch is latched and unlatched by the signal ALE. The eprom is accessed by a low level signal on PSEN. When PSEN is low the next instruction is fetched from the eprom. ALE will transition from high to low midway through the PSEN pulse. While ALE is high and PSEN is low, data(the next instruction) is read from the eprom. This process continues in a cyclic fashion as the program is executed. The chip labeled U6(6164) is an 8 K x 8 bit static RAM chip. The purpose of the RAM in this configuration is to provide the microcontroller with more 'scratch pad' memory than is available on the 8051. The 8051 provides only 256 bytes of RAM space on chip which is not enough to handle all the computations and variables need to successfully complete our task. The external static RAM chip is treated as an external peripheral chip as it is attached directly to the subsystems address/data bus. Both temporary variables as well as the working calibration information is stored in the external RAM for easy access by the microcontroller.

The chip labeled U7(74HC138) is a 3 bit to a one of eight address decoder(demultiplexer) chip. Address information is supplied to the chip through pins

one through three by address lines A13, A14, and A15. Each of eight outputs on the chip will move to a low state corresponding to the address on the inputs. The decoder chip therefore determines which peripheral chip is being accessed by the microcontroller. The addresses of each of the peripheral chips are set in hardware. The software programmer knows where each of the peripheral chips are located from this hardware decoding scheme and writes programs accordingly. The AND gate driving the G2A pin on U6 serves to disable all peripherals when RD and WR are inactive. This occurs frequently as the microcontroller accesses program memory stored in the eprom.

The chip labeled U8(74HC08) is a quad AND gate chip. Two of the four gates are used in this circuit with the inputs of the other two gates tied to ground to prevent oscillation. The function of the two AND gates used is described in the chip description which utilizes the gate. The explanation will not be repeated here.

The chip labeled U9(74HC04) is a hex inverter chip. Only one of the six gates are used in this circuit with the inputs of the other five gates tied to ground to prevent oscillation. The single inverter utilized is used to invert the signal generated by the parallel communication to a signal compatible with the 8051's external interrupt input.

NOTES:

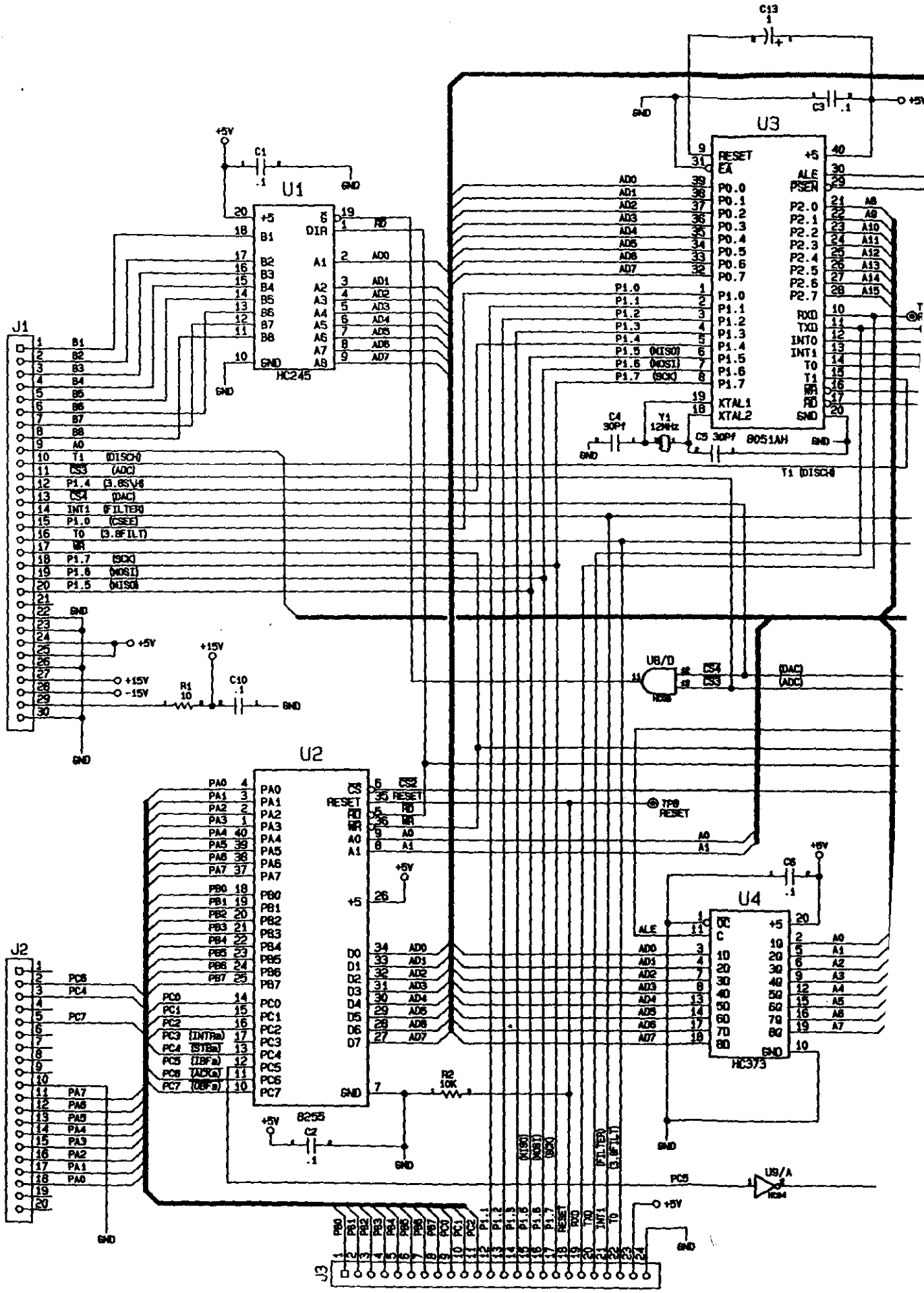

U1
HC245
U2
8255
U3
8051AH
U4
HC373
U8/D
U9/A
J1
J2
J3
C1
C2
C3
C4
C5
C6
C10
C13
R1
R2
Y1
12MHz
+5V
+15V
-15V
GND

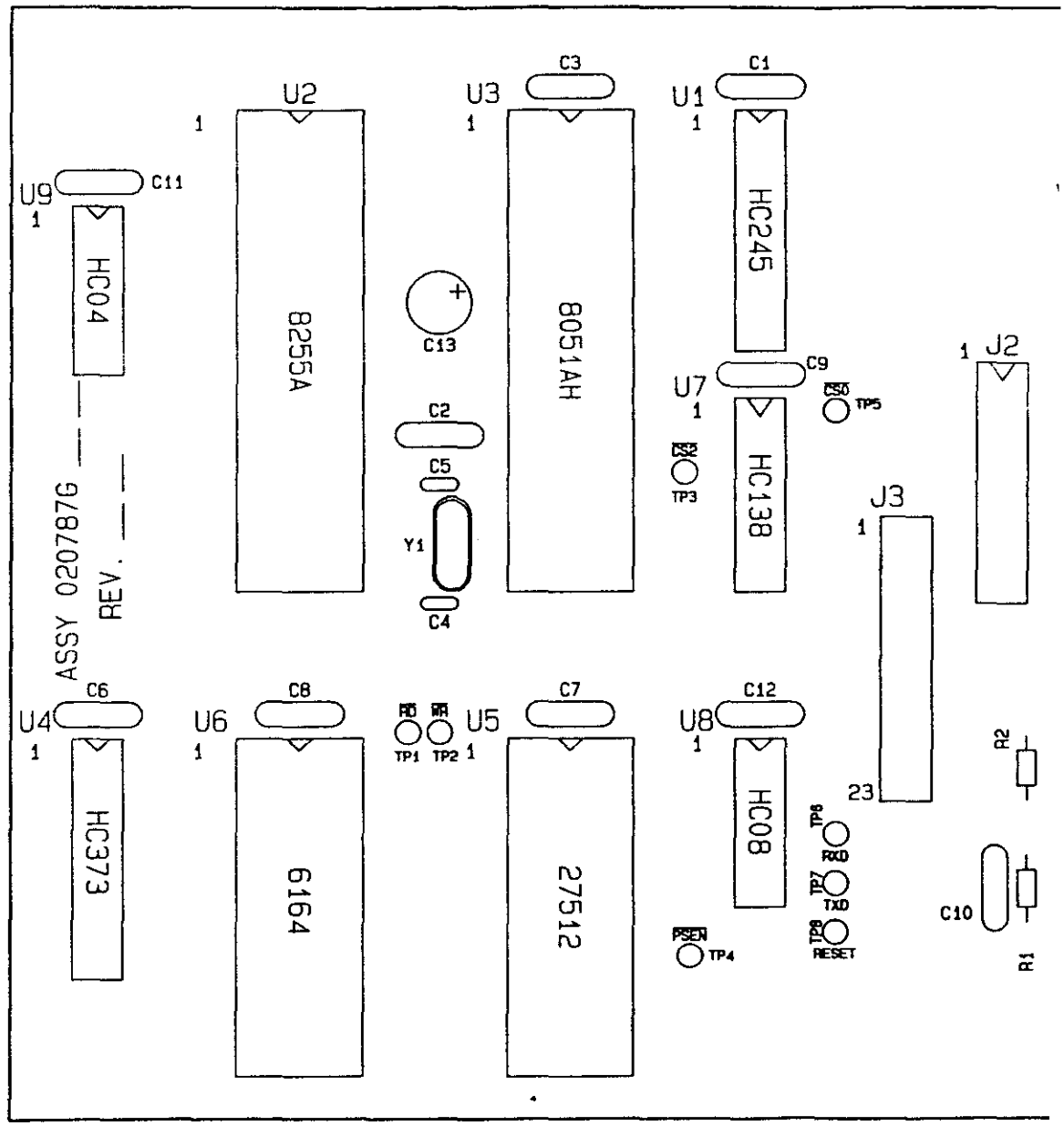

PWB 310186 PATT D

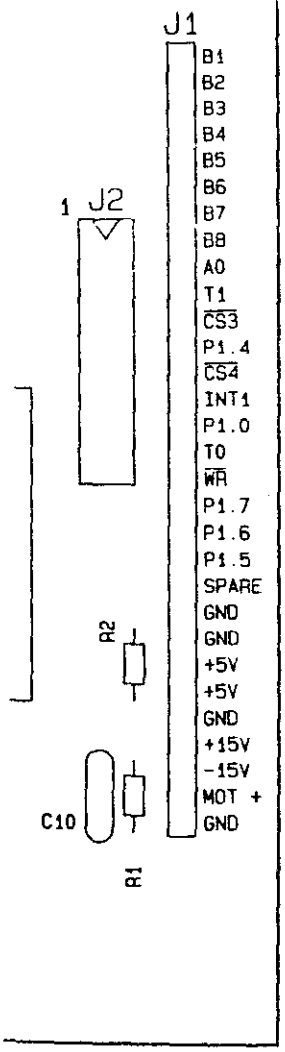

5 PATT D

PWB ASSY, MICROCONTROLLER, 5000
020787 REV F

Bill of Materials

Assembly Number: 020787
Assembly Desc.: PWB ASSY, Microcontroller

REFERENCE DESIGNATOR	COMPONENT LOCATION	COMPONENT DESCRIPTION	CMI REPLACEMENT PART NUMBER
C1	E5	CAP,CER,.1UF,20%,50V	110005
C10	C4	CAP,CER,.1UF,20%,50V	110005
C11	C6	CAP,CER,.1UF,20%,50V	110005
C12	C5	CAP,CER,.1UF,20%,50V	110005
C13	C6	CAP,TANT,1.0UF	905003
C2	D6	CAP,CER,.1UF,20%,50V	110005
C3	E5	CAP,CER,.1UF,20%,50V	110005
C4	C6	CAP,CER,30PF,50V,IC#300BCR050K	110031
C5	D6	CAP,CER,30PF,50V,IC#300BCR050K	110031
C6	C6	CAP,CER,.1UF,20%,50V	110005
C7	C5	CAP,CER,.1UF,20%,50V	110005
C8	C6	CAP,CER,.1UF,20%,50V	110005
C9	D5	CAP,CER,.1UF,20%,50V	110005
J1	E4	HDR,STR 30PIN FLAT,.100CC	320442
J2	D4	SOCKET,IC,20 PIN DIP,.30CC,STR	320176
R1	C4	RES,FILM,10 OHM,1/4W,1%	904031
R2	C4	RES,FILM,10K OHM,1/4W,1%	904034
U1	E5	IC,74HC245AN,BUS TRANSCEIVER	220138
U2	E6	IC,8255A-5 PPI I/O PORT	220089
U3	E5	IC,P80C51FA,MICROCONTROLLER	220146
U4	C7	IC,74HC373N,OCTAL LATCH	220155
U5	C5	IC,27C512R-12DC,EPROM,64Kx8BIT	220157
U6	C6	IC,MK4864N-120NS SRAM 8Kx8BIT	220163
U7	D5	IC,74HC138AN,1OF8 DECON/DEMUX	220178
U8	C5	IC,74HC08N,QUAD INPUT AND GATE	220119
U9	C6	IC,74HC04N, HEX INVERTER	220124
XU5	BC5	SOCKET,IC,28 PIN DIP,.60CC,STR	320219
Y1	D6	XTAL,12MHZ,M-TRON	130024
		PWB,MICRCNTRLLR,5000/568,PAT D	310186

EQUIPMENT

- Test 568 Intoxilyzer With Tested Board.
- Digital Voltmeter (Keithley 175 Or Equivalent).
- Oscilloscope (Hitachi V202 Or Equivalent).
- X10 Scope Probe.
- Test Keyboard (Xt Model Or Equivalent).

TESTING METHODS

Preliminary Checks/Setup.

Carefully inspect the microcontroller board for obvious problems such as solder bridges, missing components, reversed components, cold soldering joints, unsoldered joints, lead flagging, etc.,. Use extreme care any repairs made since this is a multilayer board.

1. Verify that the +5.0 v, +15.0v and -15.0v busses are not shorted to ground or to each other. The +15.0v and -15.0v busses should read infinity when checked to ground.

2. Place the test software into u5 socket. Be careful to that the i.c. Orientation is correct.

3. Connect the microcontroller board to j1 on the processor board.

4. Connect the slave cable to j2 on the microcontroller board.

Test Procedure.

Turn power on. If there is a noticeable power supply squeal or the i.r. Source is not lit, turn power off and troubleshoot the various power busses. Check for +15.0 vdc at j7-4, -15.0 vdc at j7-3 and +5.0v at j7-2 on the multichannel processor board.

1. Check that the voltage drops across r50 on the processor board does not exceed 1.8 vdc.

2. Check the a.g.c. Level at the junction of r14 and q1-e on the processor board. The voltage should be between +3.5 vdc and +9.5 vdc. The cool detector output signal at u1-6 should be approximately 7.0 vpp (see figure #1).

3. Check the various signals/levels at j1-1 to j1-20 on the microcontroller board (see figure #2).

4. Depress the reset switch. If the unit has not come out of "warm up" mode, set the cell temperature test switch to the bypass position. The intoxilyzer will now perform a diagnostics check. Whenever the channel signal and readings are displayed, depress "esc, esc" on the until the "ch, c, d, i, r, q" menu is displayed. Depress the "r" key to auto range the unit. Verify that channels "0", "1" and "2" read signal levels of approximately 3500 and the last four digits that read the noise levels are less than 0020 (i.e. Ch 1 3500 0012).

5. Turn power off. Remove the slave cable from j2. Remove the microcontroller board from the processor board. Remove the test software from u-5 socket.

6. Place a test label with the technician pay number and date code on the assembly near the "rev" marking on the board.

7. Place the tested board in a static-proof bag before any other handling is performed.

General Description

The main purpose of the analog processor board assembly is to convert the signals from the cooled, lead selenide, IR detector into a digital format which can be read by the controller assembly. All support functions (cooler control circuitry, regulators, eeprom, etc...) required to meet this end are also handled by the analog processor board. the description of the analog processor board will be broken up into sections or functional blocks before a 'big picture' description will be attempted.

NOTES:

Schematic

NOTES:

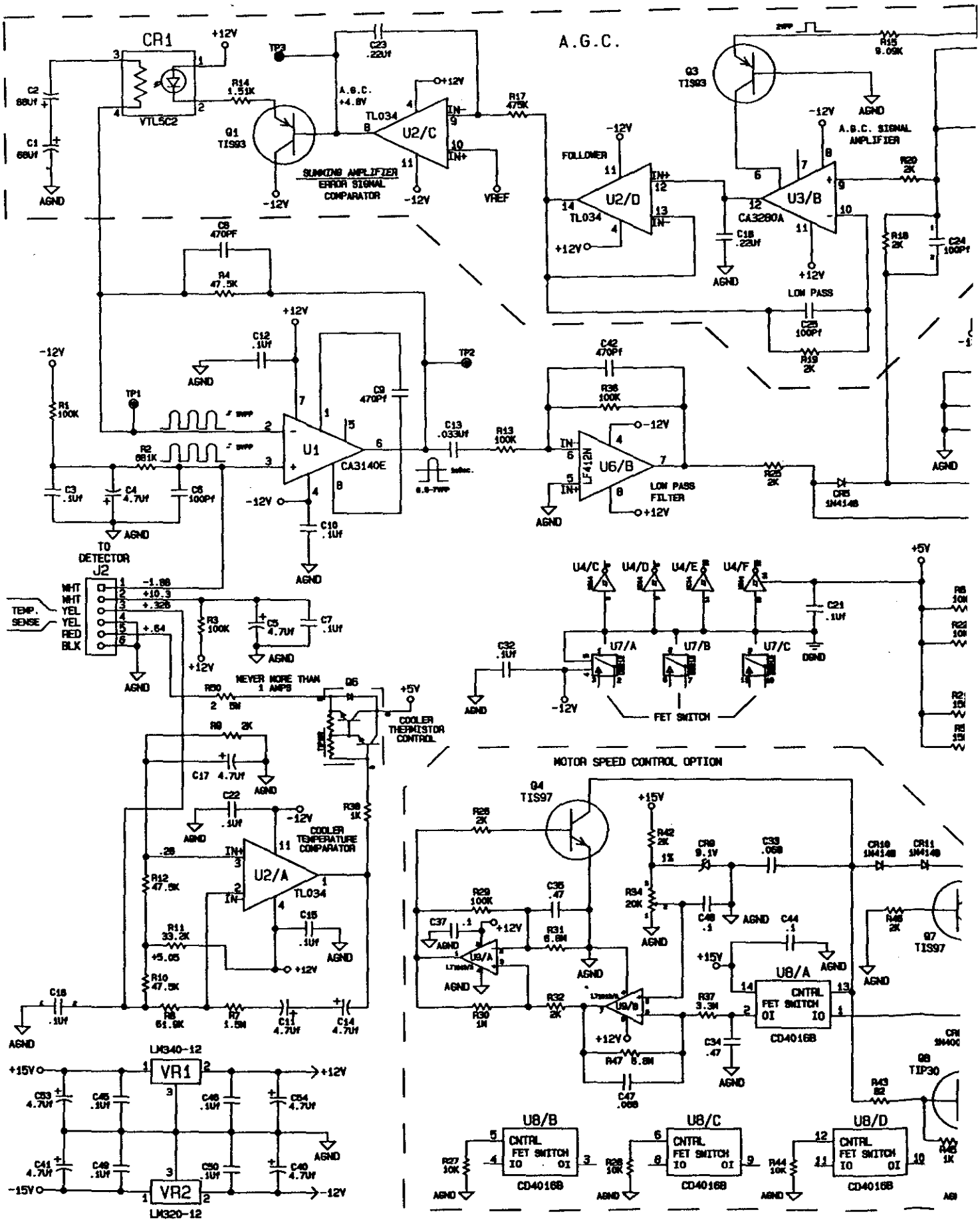
A.G.C.
CR1
VTL5C2
+12V
TP3
C23 .22Uf
R14 1.51K
Q1 TIS93
A.G.C. +4.8V
TL034
U2/C
SUMMING AMPLIFIER
ERROR SIGNAL COMPARATOR
R17 475K
VREF
Q3 TIS93
R15 9.09K
A.G.C. SIGNAL AMPLIFIER
FOLLOWER
U2/D
TL034
CA3280A
U3/B
R20 2K
C18 .22Uf
R18 2K
C24 100Pf
LOW PASS
C25 100Pf
R19 2K
C8 470PF
R4 47.5K
C12 .1Uf
TP2
C42 470Pf
R36 100K
C9 470Pf
TP1
R1 100K
R2 681K
U1
CA3140E
C13 .033Uf
R13 100K
U6/B
LF412N
LOW PASS FILTER
R25 2K
CR5 1N4148
C3 .1Uf
C4 4.7Uf
C6 100Pf
C10 .1Uf
TO DETECTOR
J2
WHT
WHT
YEL
YEL
RED
BLK
TEMP. SENSE
-1.88
+10.3
+.326
+.64
R3 100K
C5 4.7Uf
C7 .1Uf
U4/C
U4/D
U4/E
U4/F
C21 .1Uf
C32 .1Uf
U7/A
U7/B
U7/C
FET SWITCH
NEVER MORE THAN 1 AMPS
R30 5W
Q6
COOLER THERMISTOR CONTROL
R9 2K
C17 4.7Uf
C22 .1Uf
R38 1K
COOLER TEMPERATURE COMPARATOR
U2/A
TL034
R12 47.5K
C15 .1Uf
R11 33.2K
R10 47.5K
C16 .1Uf
R6 51.9K
R7 1.5M
C11 4.7Uf
C14 4.7Uf
MOTOR SPEED CONTROL OPTION
Q4 TIS97
R26 2K
R42 2K
CR9 9.1V
C39 .068
CR10 1N4148
CR11 1N4148
R29 100K
C36 .47
R34 20K
C37 .1
R31 6.8M
C40 .1
C44 .1
R46 2K
Q7 TIS97
U8/A
CNTRL FET SWITCH
CD4016B
R32 2K
R37 3.3M
R30 1M
R47 6.8M
C47 .068
C34 .47
Q8 TIP30
R43 82
R45 1K
U8/B
U8/C
U8/D
R27 10K
R28 10K
R44 10K
LM340-12
VR1
VR2
LM320-12
+15V
-15V
C53 4.7Uf
C45 .1Uf
C46 .1Uf
C54 4.7Uf
C41 4.7Uf
C49 .1Uf
C50 .1Uf
C40 4.7Uf
AGND

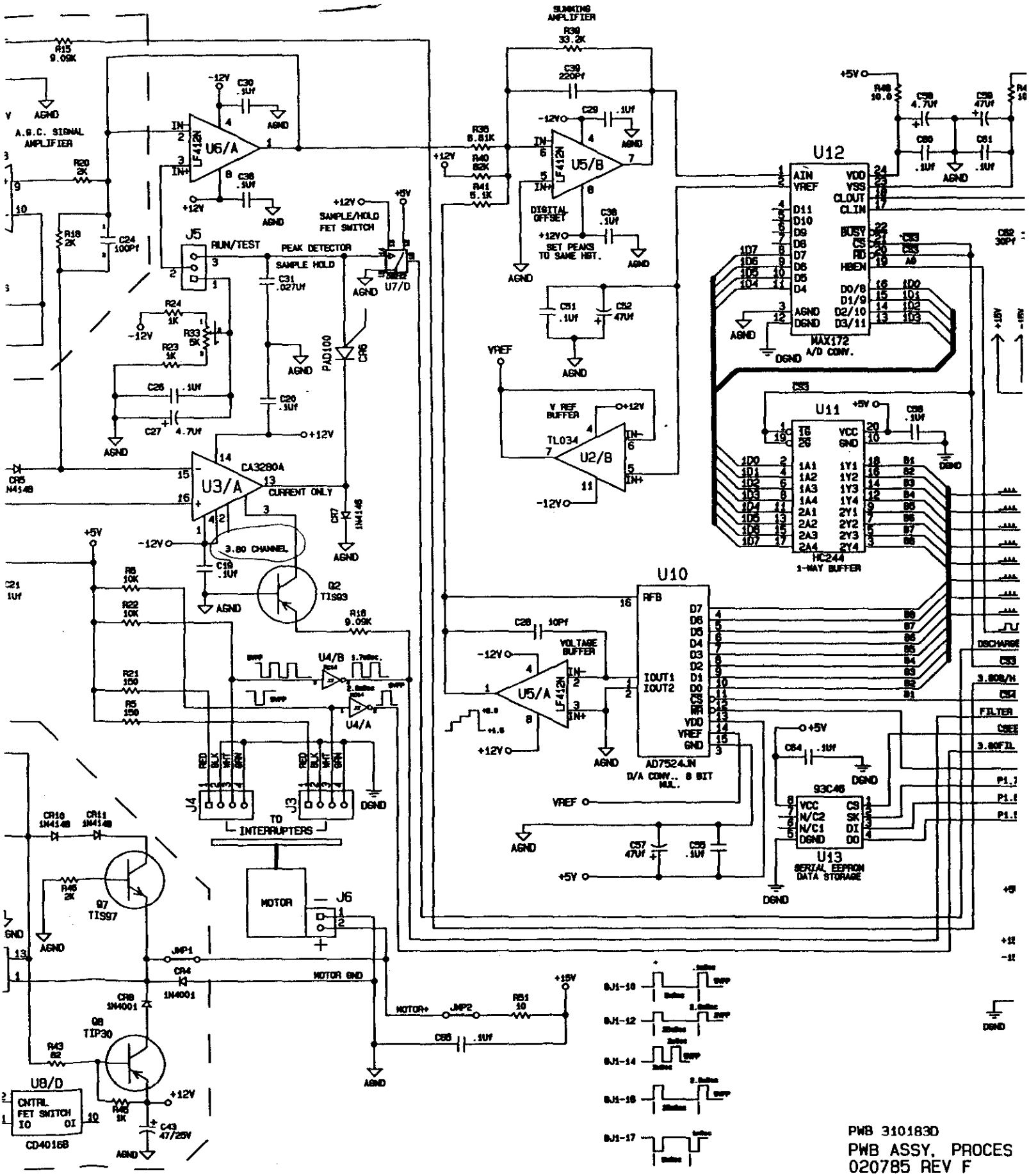
A.G.C. SIGNAL AMPLIFIER
U6/A
LF412N
J5
RUN/TEST
PEAK DETECTOR
SAMPLE HOLD
SAMPLE/HOLD FET SWITCH
U7/D
PAD100
CR6
U3/A
CA3280A
CURRENT ONLY
3.80 CHANNEL
Q2 TIS93
U4/B
U4/A
J4
J3
TO INTERRUPTERS
MOTOR
J6
Q7 TIS97
Q8 TIP30
U8/D
CNTRL FET SWITCH
CD4016B
MOTOR GND
MOTOR+
SUMMING AMPLIFIER
U5/B
DIGITAL OFFSET
SET PEAKS TO SAME HGT.
V REF BUFFER
TL034
U2/B
VOLTAGE BUFFER
U5/A
U12
MAX172
A/D CONV.
U11
HC244
1-WAY BUFFER
U10
AD7524JN
D/A CONV., 8 BIT MUL.
U13
93C46
SERIAL EEPROM DATA STORAGE
DISCHARGE
FILTER
PWB 310183D
PWB ASSY, PROCES
020785 REV F

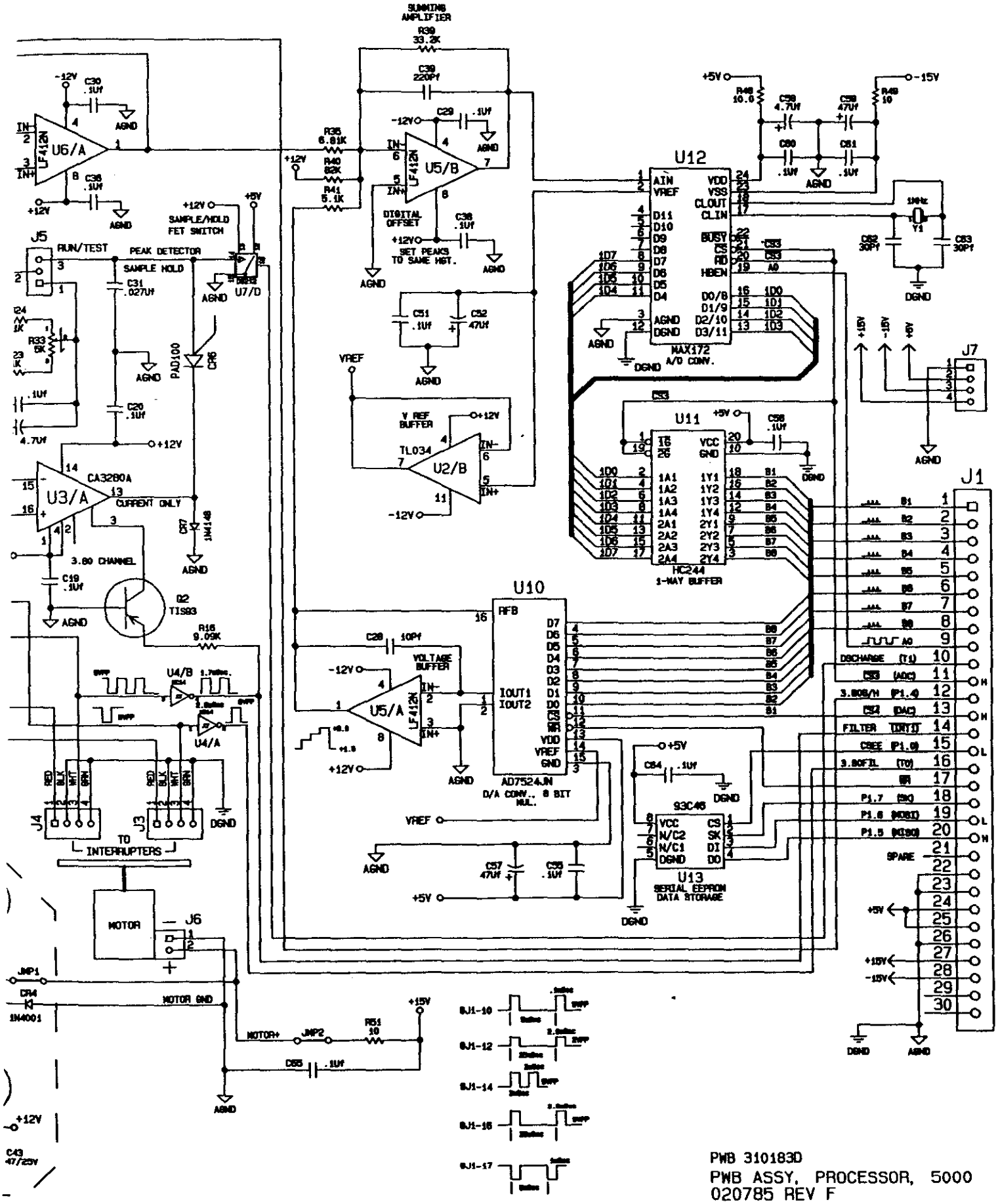

PWB 310183D
PWB ASSY, PROCESSOR, 5000
020785 REV F

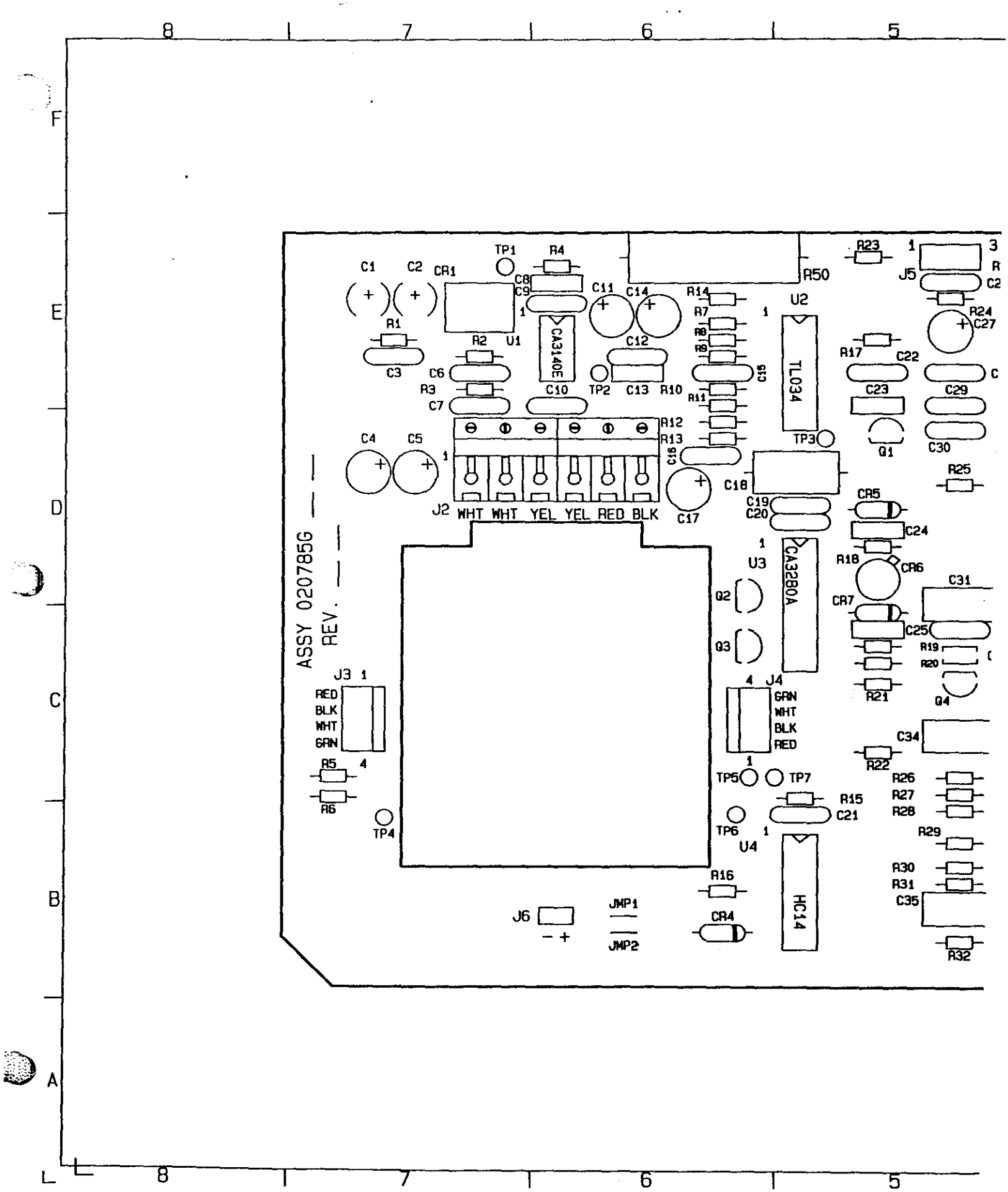

ASSY 020785G
REV.
TP1
R4
C1
C2
CR1
C8
C9
C11
C14
R14
R7
R8
R9
R50
R23
J5
U2
R24
C27
R1
R2
U1
CA3140E
C12
C15
TL034
R17
C22
C3
C6
R3
C7
C10
TP2
C13
R10
R11
C23
C29
R12
R13
C16
TP3
Q1
C30
C4
C5
J2
WHT WHT YEL YEL RED BLK
C17
C18
R25
C19
C20
CR5
C24
U3
CA3280A
R18
CR6
C31
Q2
CR7
C25
Q3
R19
R20
J3
RED
BLK
WHT
GRN
J4
GRN
WHT
BLK
RED
R21
Q4
C34
R5
R6
R22
TP5
TP7
R26
R27
R28
R15
C21
TP4
TP6
U4
R29
R16
R30
R31
C35
J6
JMP1
JMP2
CR4
HC14
R32

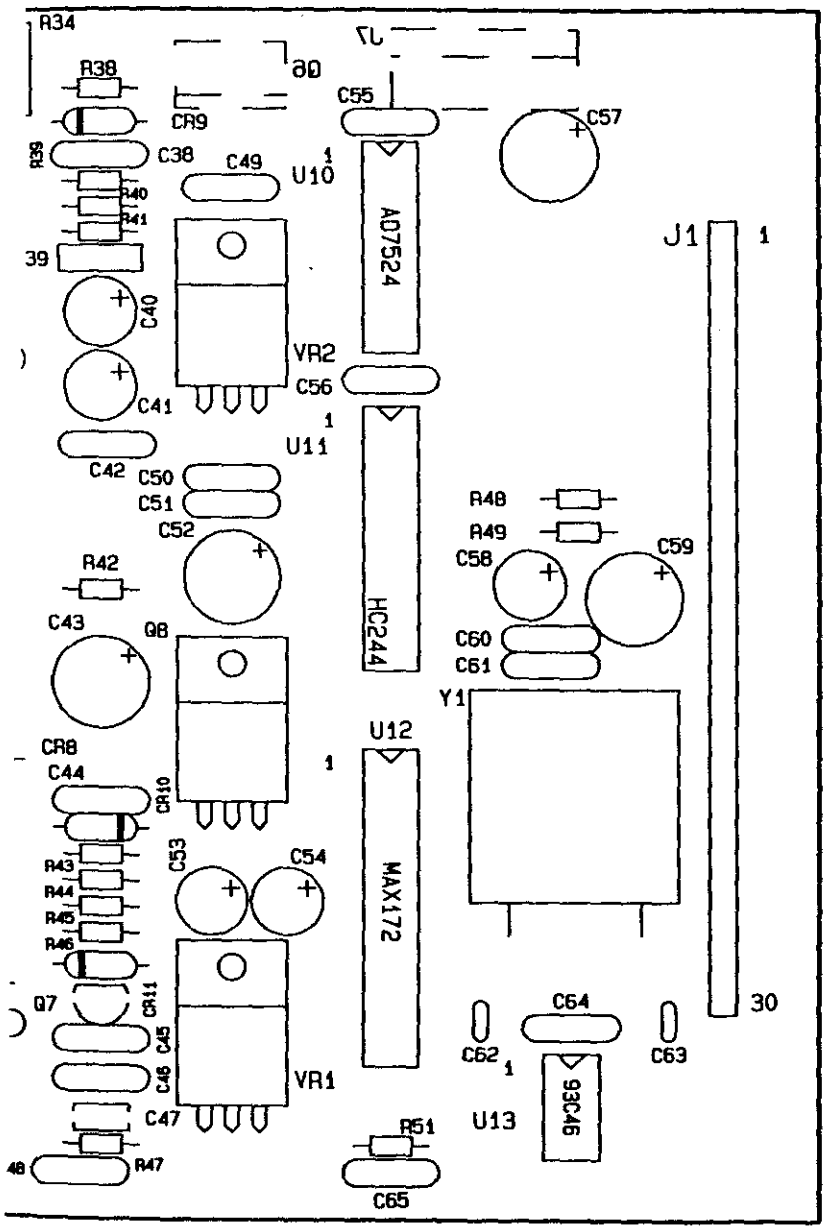

PWB 310183 PATT D

PWB ASSY, PROCESSOR, 5000
310183 REV F

Bill of Materials

Assembly Number: 020785
Assembly Desc.: PWB ASSY, Analog Processor

REFERENCE DESIGNATOR	COMPONENT LOCATION	COMPONENT DESCRIPTION	CMI REPLACEMENT PART NUMBER
C1	E7	CAP,TANT,68UF,25V	110007
C10	E6	CAP,CER,.1UF,20%,50V	110005
C11	E6	CAP,TANT,4.7UF+/-20%,16V,RAD	110061
C12	E6	CAP,CER,.1UF,20%,50V	110005
C13	E6	CAP,CER,.033UF,50V,CK05BX333K	110128
C14	E6	CAP,TANT,4.7UF+/-20%,16V,RAD	110061
C15	E6	CAP,CER,.1UF,20%,50V	110005
C17	D6	CAP,TANT,4.7UF+/-20%,16V,RAD	110061
C18	D6	CAP,CER,.1UF,20%,50V	110005
C18	D6	CAP,METAL POLY,.22UF,100V	110100
C19	D5	CAP,CER,.1UF,20%,50V	110005
C2	E7	CAP,TANT,68UF,25V	110007
C20	D5	CAP,CER,.1UF,20%,50V	110005
C21	C5	CAP,CER,.1UF,20%,50V	110005
C22	E5	CAP,CER,.1UF,20%,50V	110005
C23	E5	CAP,.22UF,CK06BX224K	110038
C24	D5	CAP,CER,100 PF,500V	905023
C25	C5	CAP,CER,100 PF,500V	905023
C26	E5	CAP,CER,.1UF,20%,50V	110005
C27	E5	CAP,TANT,4.7UF+/-20%,16V,RAD	110061
C28	E5	CAP,CER,10PF+/-10%,500V	110099
C29	E5	CAP,CER,.1UF,20%,50V	110005
C3	E7	CAP,CER,.1UF,20%,50V	110005
C30	E5	CAP,CER,.1UF,20%,50V	110005
C31	D5	CAP,METAL POLY,5%,100V,.027	905065
C32	D5	CAP,CER,.1UF,20%,50V	110005
C36	D5	CAP,CER,.1UF,20%,50V	110005
C38	E4	CAP,CER,.1UF,20%,50V	110005
C39	E4	CAP,CER,220PF,CK05BX221K	110114
C4	D7	CAP,TANT,4.7UF+/-20%,16V,RAD	110061
C40	E4	CAP,TANT,4.7UF+/-20%,16V,RAD	110061
C41	D4	CAP,TANT,4.7UF+/-20%,16V,RAD	110061
C42	D4	CAP,CER,470PF,500V	905031
C45	B4	CAP,CER,.1UF,20%,50V	110005
C46	D4	CAP,CER,.1UF,20%,50V	110005
C49	E4	CAP,CER,.1UF,20%,50V	110005
C5	D5	CAP,TANT,4.7UF+/-20%,16V,RAD	110061
C50	D4	CAP,CER,.1UF,20%,50V	110005
C51	D4	CAP,CER,.1UF,20%,50V	110005
C52	D4	CAP,TANT,47UF,20%,35V	110093
C53	C4	CAP,TANT,4.7UF+/-20%,16V,RAD	110061
C54	C3	CAP,TANT,4.7UF+/-20%,16V,RAD	110061
C55	E3	CAP,CER,.1UF,20%,50V	110005
C56	D3	CAP,CER,.1UF,20%,50V	110005
C57	E3	CAP,TANT,47UF,20%,35V	110093
C58	D3	CAP,TANT,4.7UF+/-20%,16V,RAD	110061
C59	D3	CAP,TANT,47UF,20%,35V	110093

020785: PWB ASSY, Analog Processor

EQUIPMENT

- Test 568 Intoxilyzer With Tested Boards.
- Digital Voltmeter (Keithley 175 Or Equivalent).
- Oscilloscope (Hitachi V202 Or Equivalent).
- X10 Scope Probe.
- Test Keyboard (Xt Model Or Equivalent).
- Soldering Iron.

TESTING METHODS

Preliminary Checks/Setup.

Carefully inspect the processor board for any obvious problems, such as solder bridges, missing components, reversed components, cold soldered joints, unsoldered joints etc.,. Extreme care should be taken on any repair made since this is a multilayer board.

1. Verify all i.c.'s are the correct ones and oriented properly. Verify that VR-1 is a LM340-12 (+12.0 vdc) and VR-2 is a LM320-12 (-12.0 vdc) regulator.

2. Place a heat sink on the collector of Q6.

3. Connect the test jumper from J5-2 to J5-3.

4. Connect the test microcontroller board to J1.

5. Place the processor board into the test 568 unit. Connect the input power connector to J7. Secure the board to the test 568 unit with only one screw at the top center of the board. Verify that the heat sink of q6 does not touch 568 chassis.

6. Connect the six cool detector leads to J2 being careful to see that the colors of the various leads match the board marking.

7. Connect the chopper wheel motor to J6 and the wheel assembly interrupters to the correct J3 and J4 connectors.

8. Connect the slave cable from the cpu board to J2 on the microcontroller board.

Testing Procedure.

Turn power on. If there is a noticeable power supply squeal or the i.r. source is not lit, turn power off and troubleshoot the various input power busses. Check for −15.0 vdc at j7-4, -15.0 vdc at j7-3 and +5.0 vdc at j7-2.

1. Check the voltage drop across r50. It should be less than 1.8 vdc and decreasing in voltage whenever the unit is first turned on. This voltage drop is the amount of current the cool detector is drawing. Damage may occur to the cool detector if the current is too high.

2. Check that the a.g.c. voltage at the junction of r14 and q1-e is between +9.5 vdc and +3.5 vdc.

3. Check that the filter pulses at u4-4 are approximately 1.7 ms wide and approximately 4.5 vpp. The width of these pulses vary slightly with the chopper wheel motor speed setting. (see figure #1).

4. Check that the 3.80 filter pulse at u4-2 is approximately 4.5 vpp and approximately 2.6 ms wide. Adjust the pulse duration for 25 milliseconds with the chopper wheel motor adjustment potentiometer (see figure #1).

5. Check the cool detector output pulses at u1-3. The signal output should be between .3 vpp to .6 vpp. This signal level will vary with cool detectors. Check with the test supervisor if this output signal is not within the range of .3 vpp for disposition on its use. The signal output at u1-6 should be approximately 7.0 vpp. The signal should not be jumpy or appear to be riding on a.c. level. If this occurs, troubleshoot the a.g.c. circuit. The positive peaks must not be clipped. (see figure 2).

6. Check for the various signals/levels at j1-1 to j1-20 on the microcontroller board. (see figure #3).

7. Recheck that the voltage drop across r50 does not exceed 1.8 vdc.

8. Depress the reset switch. After the intoxilyzer has come out of the "warm-up" mode of operation, a diagnostics check will be performed. Whenever the channel signal and noise readings are displayed (channels 0, 1, 2, 3, 4), perform the "esc, esc" function on the keyboard. Depress the "r" whenever the "ch, c, d, i, r, q" menu is displayed. An "auto range" function will now be performed on the unit. Verify that the "0", "1", and "2" channel signal and noise levels are acceptable. The signal levels should be approximately counts and the noise levels must be less than 0020 (example ch 0 3500 0015).

9. Turn power off. Remove all connectors placed on the processor board earlier. Remove the heat sink from q6. Remove the six cool detector wires from j2. Remove the microcontroller board from j1.

10. Remove the processor board from the 568 test unit chassisplace a test label with the technician pay number and date code on the assembly near the "rev" marking on the board. Place the tested board in a static-proof bag before any other handling is performed.

NOTES:

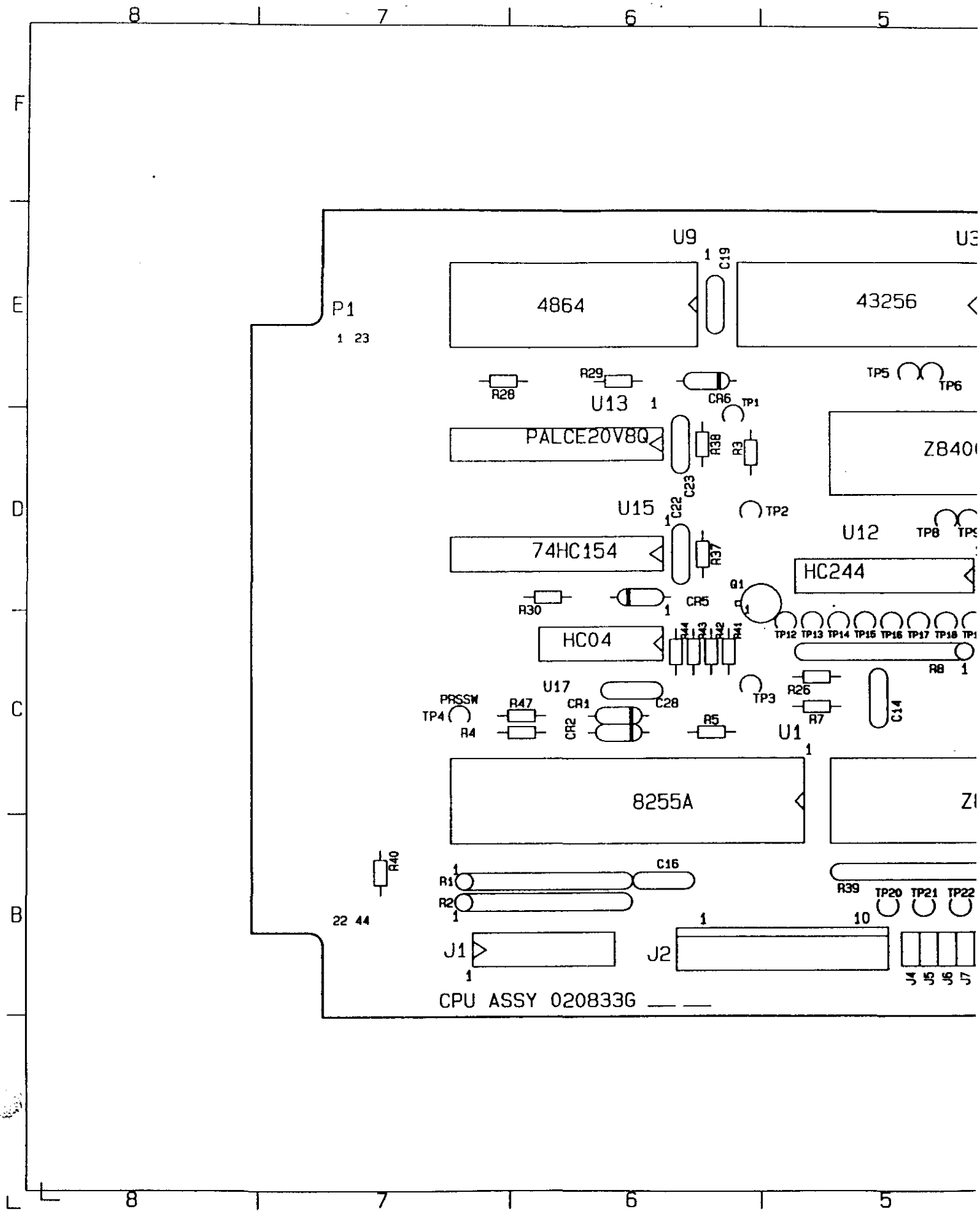
8
7
6
5
F
E
D
C
B
L
U9
U3
C19
4864
43256
P1
1 23
R29
R28
U13
CR6
TP1
TP5
TP6
PALCE20V8Q
R38
R3
Z840
C23
U15
C22
TP2
U12
TP8
74HC154
R37
HC244
Q1
R30
CR5
HC04
R44
R43
R42
R41
TP12 TP13 TP14 TP15 TP16 TP17 TP18
R8
U17
C28
TP3
R26
PRSSW
TP4
R47
CR1
R4
CR2
R5
R7
C14
U1
8255A
R40
C16
R1
R2
R39
TP20 TP21 TP22
22 44
J1
J2
J4 J5 J6 J7
CPU ASSY 020833G

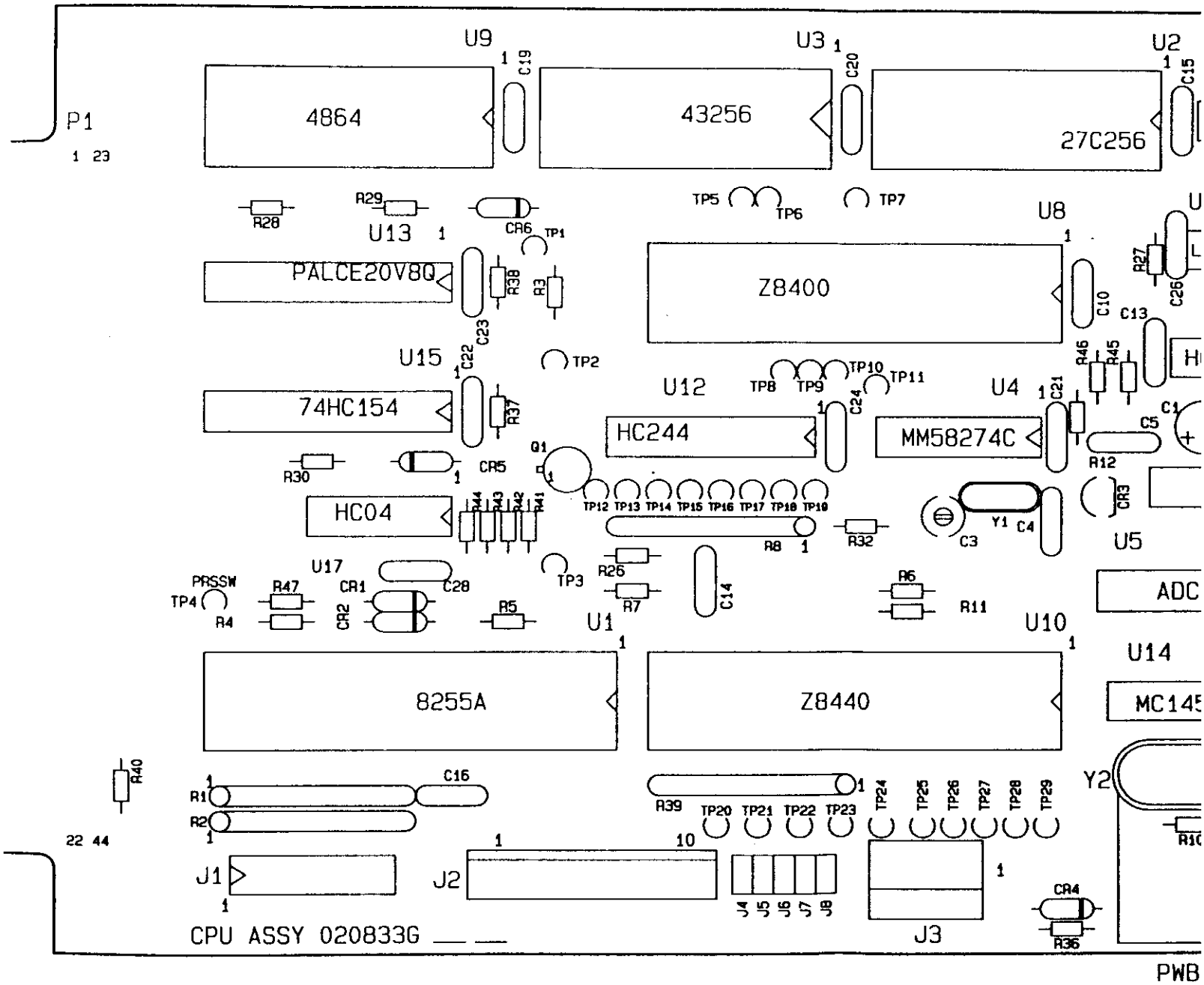
7
6
5
4
U9
U3
U2
4864
43256
27C256
P1
1 23
C19
C20
C15
R28
R29
U13
CR6
TP1
TP5
TP6
TP7
U8
PALCE20V8Q
R38
R3
C23
Z8400
C10
C13
R27
C26
U15
C22
TP2
U12
TP8
TP9
TP10
TP11
U4
74HC154
R37
HC244
C24
MM58274C
C21
R46
R45
C5
C1
R30
CR5
Q1
R12
HC04
R44
R43
R42
R41
TP12
TP13
TP14
TP15
TP16
TP17
TP18
TP19
R8
R32
C3
Y1
C4
CR3
U5
U17
PRSSW
TP4
R47
CR1
C28
TP3
R26
R7
C14
R6
R11
ADC
R4
CR2
R5
U1
U10
U14
8255A
Z8440
MC145
R40
C16
R1
R2
R39
TP20
TP21
TP22
TP23
TP24
TP25
TP26
TP27
TP28
TP29
Y2
22 44
J1
J2
J4
J5
J6
J7
J8
J3
CR4
R36
CPU ASSY 020833G
PWB

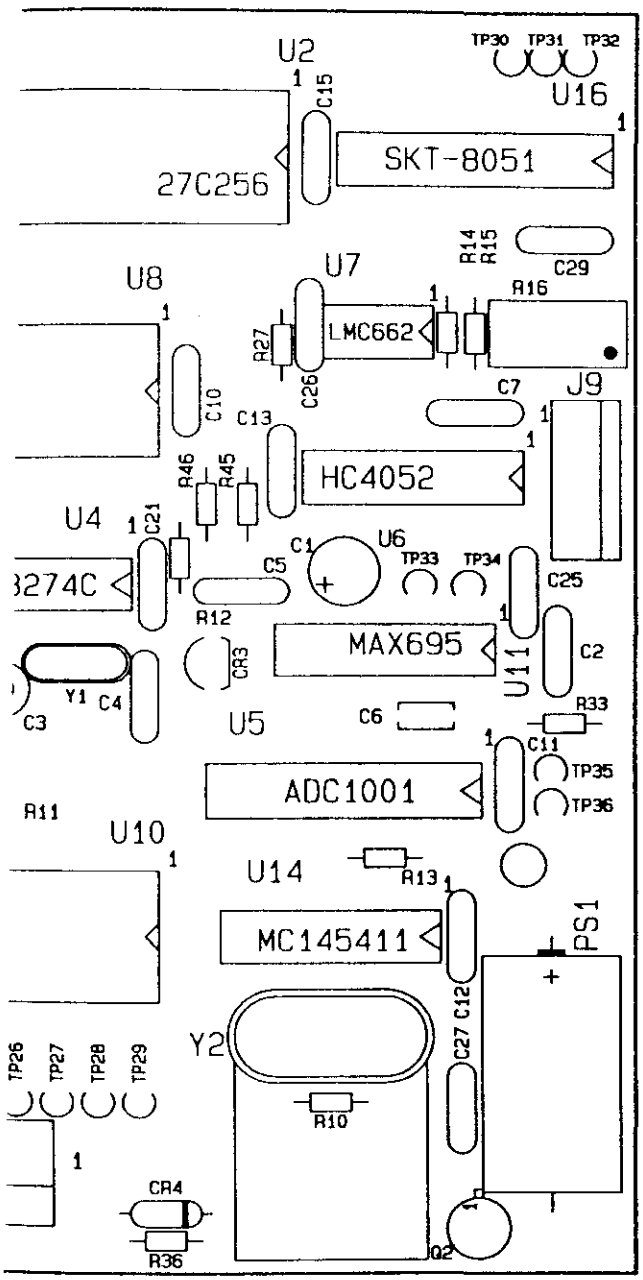

PWB 310188 PATT B

PWB ASSY, CPU, 5000
020833 REV D

Bill of Materials

Assembly Number: 020833
Assembly Desc.: PWB ASSY, CPU

REFERENCE DESIGNATOR	COMPONENT LOCATION	COMPONENT DESCRIPTION	CMI REPLACEMENT PART NUMBER
C1	D3	CAP,TANT,2.2UF,20V	110104
C10	D4	CAP,CER,.1UF,20%,50V	110005
C11	C3	CAP,CER,.1UF,20%,50V	110005
C12	B3	CAP,CER,.1UF,20%,50V	110005
C13	D4	CAP,CER,.1UF,20%,50V	110005
C14	C5	CAP,CER,.1UF,20%,50V	110005
C15	E3	CAP,CER,.1UF,20%,50V	110005
C16	B6	CAP,CER,.1UF,20%,50V	110005
C19	E6	CAP,CER,.1UF,20%,50V	110005
C2	D3	CAP,CER,.1UF,20%,50V	110005
C20	E5	CAP,CER,.1UF,20%,50V	110005
C21	D4	CAP,CER,.1UF,20%,50V	110005
C22	D6	CAP,CER,.1UF,20%,50V	110005
C23	D6	CAP,CER,.1UF,20%,50V	110005
C24	D5	CAP,CER,.1UF,20%,50V	110005
C25	D3	CAP,CER,.1UF,20%,50V	110005
C27	B3	CAP,CER,.1UF,20%,50V	110005
C28	C6	CAP,CER,.1UF,20%,50V	110005
C29	D3	CAP,CER,.1UF,20%,50V	110005
C3	C4	CAP,VAR,7-40PF	110123
C4	C4	CAP,CER,20PF,SPRAGUE #5GAQ20	110032
C5	D3	CAP,CER,.1UF,20%,50V	110005
C6	C3	CAP,CER,120PF,CK05BX121K	110097
C7	D3	CAP,CER,.1UF,20%,50V	110005
CR1	C6	DIODE,1N4148 COMPUTER GRADE	900188
CR2	C6	DIODE,1N4148 COMPUTER GRADE	900188
CR3	D4	IC,LM336Z02.5,RGLTR NAT ONLY	230030
CR4	B4	DIODE,1N746A ZENER (3.3V)	210023
CR5	D6	DIODE,1N4148 COMPUTER GRADE	900188
CR6	E6	DIODE,1N4148 COMPUTER GRADE	900188
J1	B7	SOCKET,IC,16 PIN DIP	900208
J2	B6	HDR,STR 10PIN LKG,.100CC	320184
J4	B5	HDR,STR 02 PIN FLAT,.100CC	902458
J5	B5	HDR,STR 02 PIN FLAT,.100CC	902458
J6	B5	HDR,STR 02 PIN FLAT,.100CC	902458
J7	B5	HDR,STR 02 PIN FLAT,.100CC	902458
J8	B5	HDR,STR 02 PIN FLAT,.100CC	902458
J9	E9	HDR,STR 06PIN LKG,.100CC	902303
PS1	BC3	BATTERY,LITHIUM,3.6V,1/2AA	340035
Q2	B3	XSTR,2N2222,NPN,GP AMPL,TO-18	200052
R1	B7	RES NET,10P SIP,9@100K,1/8W,2%	103050
R10	B3	RES,FILM,22 MEG OHM,1/4W,5%	100019
R11	C4	RES,FILM,100K OHM,1/4W,1%	904033
R12	D4	RES,FILM,1.0K OHM,1/4W,1%	904055
R13	C3	RES,FILM,20K OHM,1/4W,1%	904060
R2	B7	RES NET,10P SIP,9@100K,1/8W,2%	103050
R28	E7	RES,FILM,10K OHM,1/4W,1%	904034

020833: PWB ASSY, CPU

EQUIPMENT REQUIREMENTS:

- Test 568 Intoxilyzer With Tested Boards.
- Digital Voltmeter (Keithley 175 Or Equivalent).
- Oscilloscope (Hitachi V202 Or Equivalent).
- X10 Scope Probe.
- Test Keyboard (At Model Or Equivalent).
- Test Eprom - Oregon 1029 Version (G002); Michigan 1005 Version (G001).
- Printer Cards 015010.

TESTING METHODS

Preliminary Checks/Setup.

Carefully inspect the cpu board for any obvious problems such as solder bridges, missing components, reversed components, cold soldered joints, unsoldered joints, component lead flagging, etc.,. Extreme care should be taken on any repairs made since this is a multilayer board.

1. Verify all i.c.'s are the correct ones and oriented properly. Carefully insert the test eprom into u2 socket. Check that no pins are bent or damaged.

2. Solder the lithium battery (340035) into the ps1 holes on the board. Be careful to observe the correct polarity.

3. Connect the interconnection ribbon cable from the mother board (j103) to j1 on the cpu board.

4. Place two shunt jumpers (320486) onto j4 (keyboard) and j6 (baud rate) pins. Seat the jumpers properly.

5. Insert the cpu board into the mother board connector. Connect the keyboard cable to j2 and the slave cable from the microcontroller board to u10 socket.

Test Procedure.

Turn power on. If the i.r. Lamp does not come on or if there is a noticeable power supply squeal, turn power off and troubleshoot the various input power busses on the board.

1. The intoxilyzer display will indicate a "clock error", "not ready" mode, do an "air blank", indicate another "clock error", then go to a "warm-up period" mode of operation. The warm-up period will normally take approximately twenty (20) minutes for a cold start initially. After the cell warmed up sufficiently, repeated board testing will not take as long. Depressing the "reset" switch will also reduce the software waiting time.

2. After the intoxilyzer comes out of the "warm-up period", a diagnostics check on the prom, ram, temperature, processor and software version will be performed. A processor fail will be flagged for processor 7, 8, 9, a, then the channel signals of "000" or "4095" and noise of "000" readings.

3. Depress the "esc" key repeatedly until the display "ch, c, d, i, r, q,". Depress the "r" key to do an "auto range" function. Channels 0, 1, and 2 will now have signal levels of approx. "3500" and noise readings of less than 020.

4. Depress "esc, esc" repeatedly again until the various function modes are displayed. Depress the "/" key; "enter" and "esc, esc" again. Another set of various function modes (a, b, c, d, e, f, g, h, i, p, v, q) will be displayed. Depress the "e" key (preliminary test data). Go through this mode operation by repeatedly depressing the "enter" key. When prompted by the time and date displays, enter the correct time and date information.

5. Depress "esc, esc" again. Depress the "b" key (breath). Insert a printer card when prompted by the display and perform a breath test. Check the printed card for the correct heading, model, serial number, time, date, and breath routine results.

6. Depress "esc, esc" again. Depress the "d" key (diagnostics). Insert a printer card when prompted by the display. A diagnostics test for the prom, ram, temp, processor, motor, eprom, serial number match, range/stability, auto cal status, and a printer test will be performed. Range/stability, auto cal status, and diagnostics should print "failed", all other tests should print "passed". The printer test will print all letters of the alphabet and numbers from 0 to 9.

7. Depress "esc, esc" again. Depress the "f" key (clock frequency). This display should read "set to 32.768 khz". Check for this frequency at u4-13 with the oscilloscope. There should be a square wave of 4.5 vpp to 5.0 vpp presentthe frequency will be set at unit test. The start button must be depressed to get out of the frequency set mode of operation.

8. Turn power off. Check that the battery is reading +3.6 vdc check that there is clock frequency pulses at u4-14.

9. Remove all connectors added to the board during test. Remove the cpu board from the mother board edge connector. Remove the test eprom from u2.

10. Place a test label near the j3/cr4 area on the board. Record your initials and the month and year the board passed test. Place the tested board in a static proof bag before any other handling is performed.

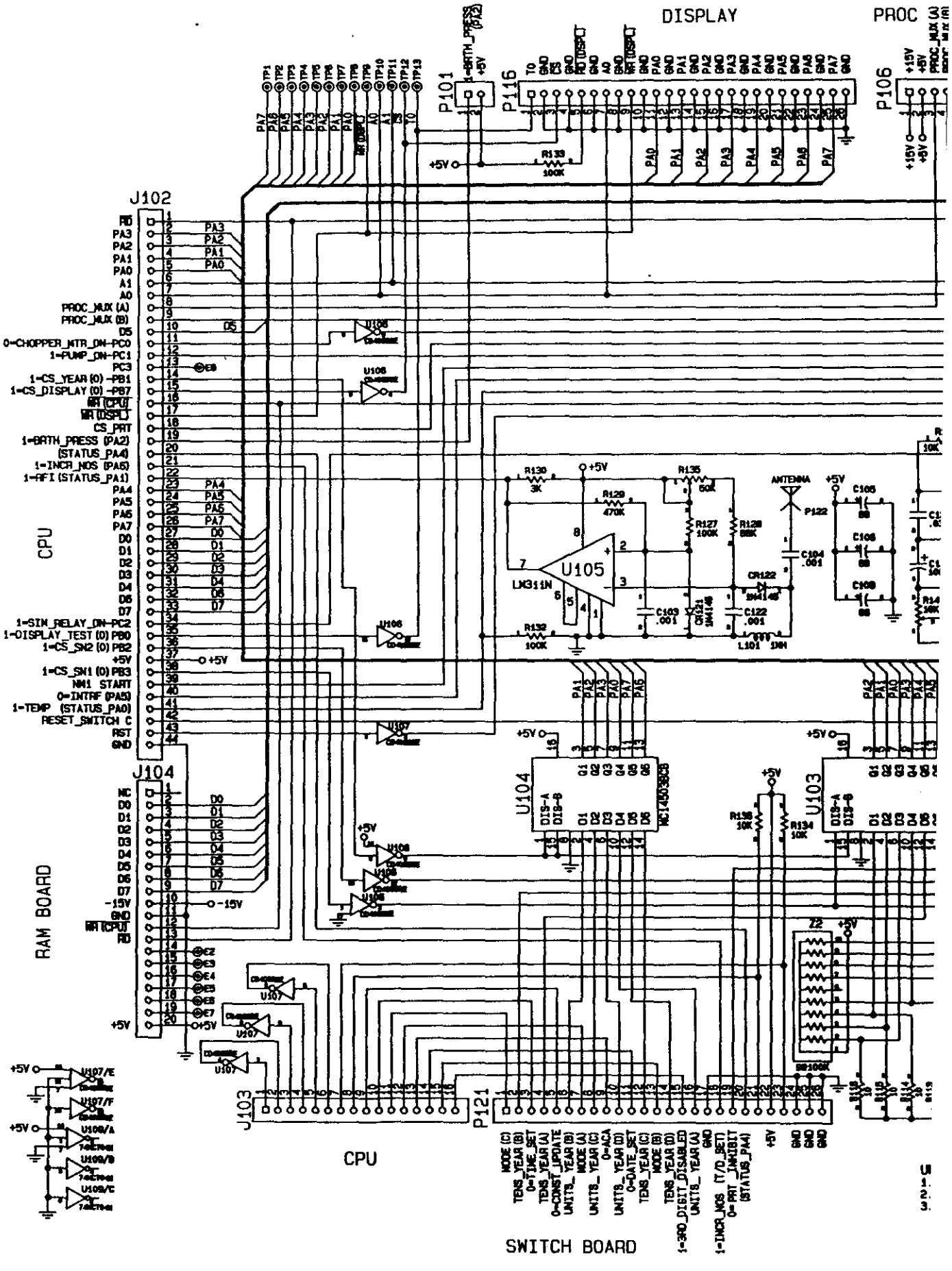
DISPLAY
PROC
P101
P116
P106
J102
CPU
J104
RAM BOARD
U105
LM311N
U104
U103
J103
P121
CPU
SWITCH BOARD

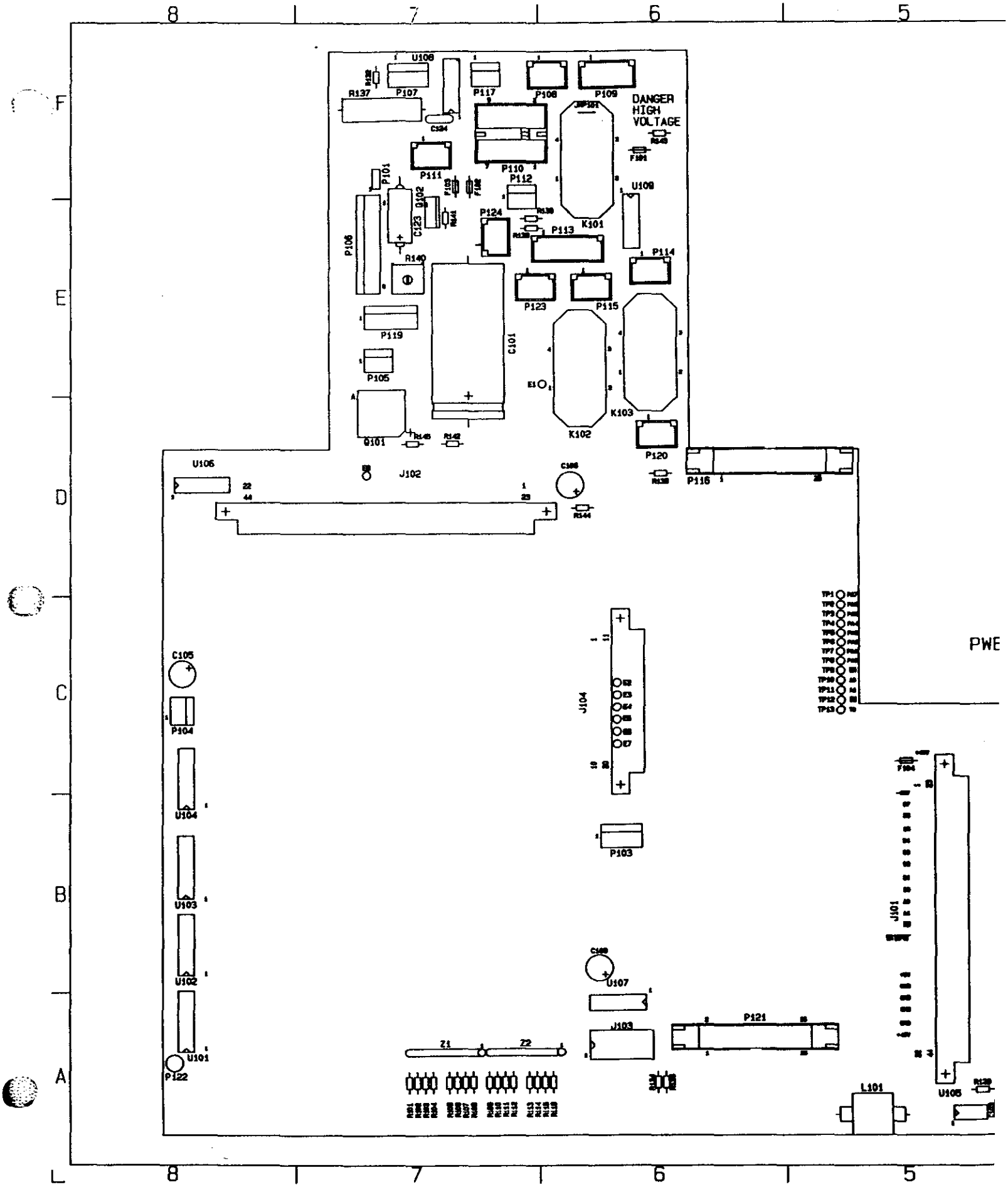

DANGER
HIGH
VOLTAGE
PWE
U108
P107
R137
P117
P108
P109
P110
P111
P112
P101
P106
C123
Q102
P124
P113
K101
U109
P114
R140
P123
P115
P119
C101
P105
K102
K103
Q101
P120
P116
U106
J102
C105
P104
U104
U103
U102
U101
P122
J104
P103
U107
J103
P121
Z1
Z2
L101
U105
J101

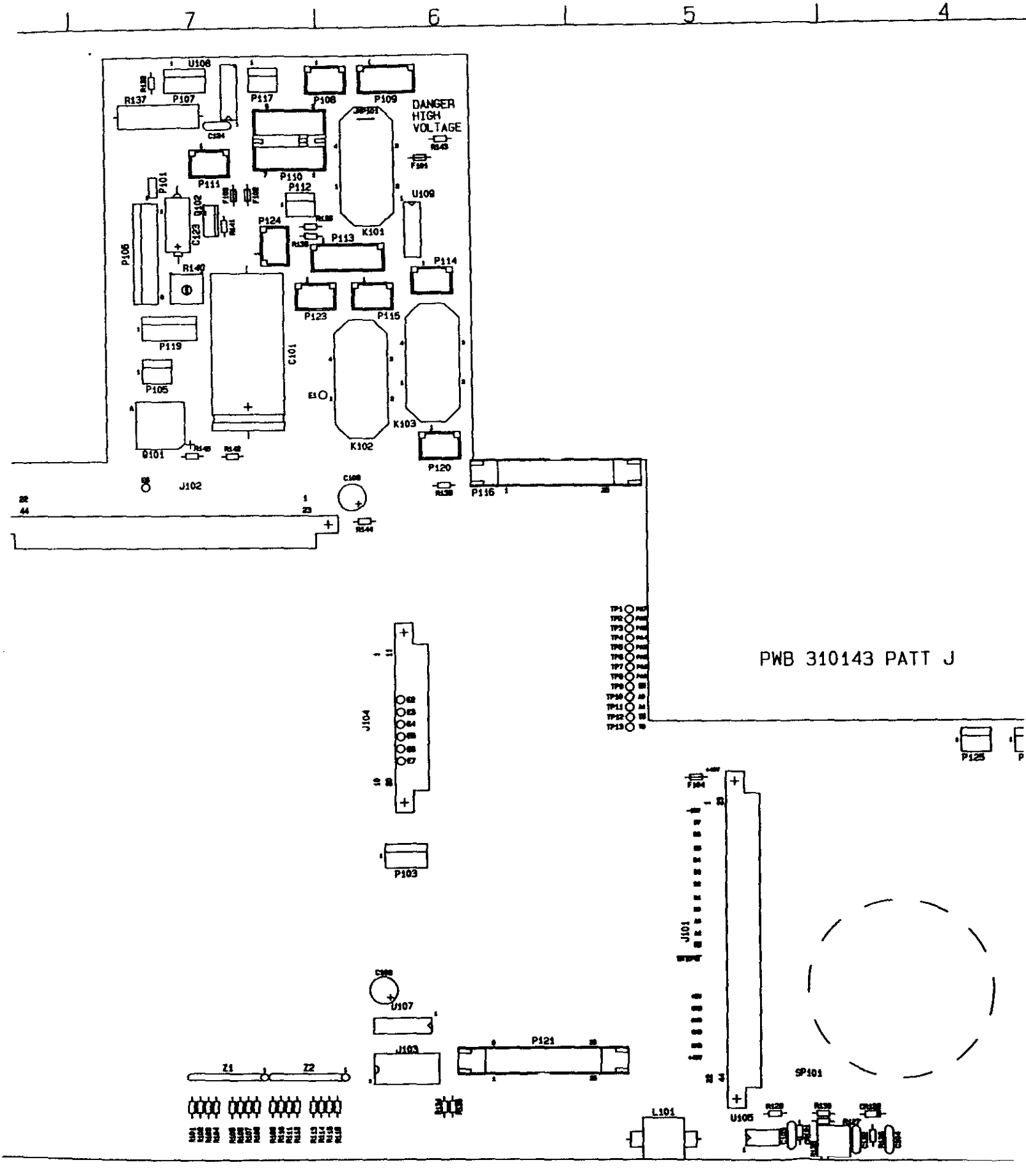

7
6
5
4
U108
R137
P107
P117
P108
P109
DANGER
HIGH
VOLTAGE
P110
P111
P112
P101
Q102
C123
P106
P124
P113
K101
U109
P114
R140
P123
P115
P119
C101
P105
K103
K102
Q101
P120
J102
P116
PWB 310143 PATT J
J104
P125
P103
J101
U107
J103
P121
Z1
Z2
SP101
L101
U105

PATT J

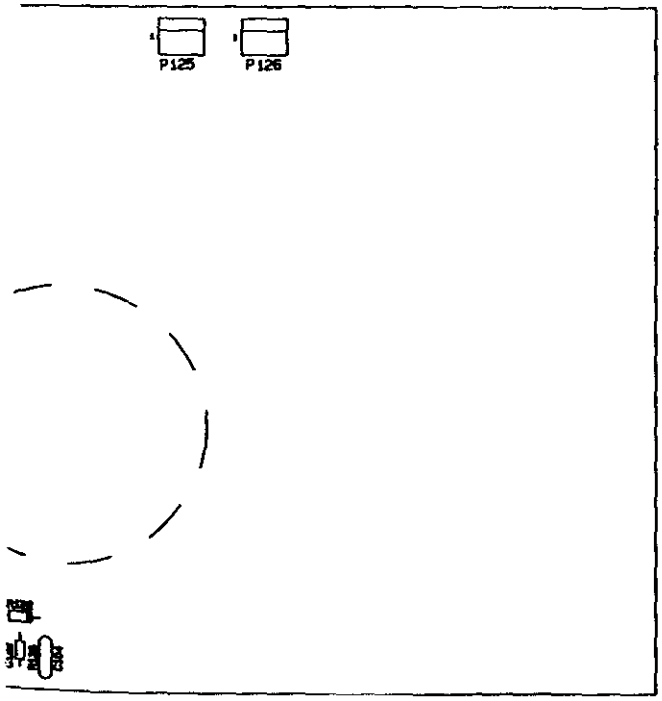

PWB ASSY, MOTHER W/TEMP CONT
020860 REV A (110V)
020861 REV A (220V)

Bill of Materials

Assembly Number: 020860
Assembly Desc.: PWB ASSY, Motherboard

REFERENCE DESIGNATOR	COMPONENT LOCATION	COMPONENT DESCRIPTION	CMI REPLACEMENT PART NUMBER
C101	E7	CAP,ELCTLT,4700UF,50V,20%,AXL	110121
C103	A5	CAP,CER,.001UF,50V	110011
C104	A4	CAP,CER,2PF,50V	110098
C105	C8	CAP,TANT,68UF,25V	110007
C106	D6	CAP,TANT,68UF,25V	110007
C108	B6	CAP,TANT,68UF,25V	110007
C122	A4	CAP,CER,.001UF,50V	110011
C123	E7	CAP,TANT,100UF,10V,SCR13C107KM	110109
C124	F7	CAP,CER,.033UF,50V,CK05BX333K	110128
CR121	A5	DIODE,1N4148 COMPUTER GRADE	210001
CR122	A4	DIODE,1N4148 COMPUTER GRADE	210001
F101	F6	FUSE,PICO,5A,LITTLEFUSE 251005	140023
F102	F7	FUSE,PICO,7A,255007	140039
F103	F7	FUSE,PICO,2AMP,#276002	140038
F104	C5	FUSE,PICO,7A,255007	140039
J101	B5	CONN,EDGE,PCB,DUAL22,.156CC	320165
J102	D7	CONN,EDGE,PCB,DUAL22,.156CC	320165
J103	A5	SOCKET,PCI 16 PIN USED 316T	320141
J104	C6	CONN,EDGE,PCB,DUAL10,.156CC	320194
JMP101	EF6	JUMPER,PREFMD,22GA INSL,.30C/C	330243
K102	DE6	RELAY,SS,PC MT,5VIN,120/240VOT	340031
K103	DE6	RELAY,SS,PC MT,5VIN,120/240VOT	340031
L101	A5	COIL,1MH+/5%,16OMA,19 OHM DCR	120012
P101	F7	CONN,MTHR BD/PRESSURE CKT	320488
P103	B6	HDR,STR 03PIN LKG,.156CC,BRKY	320030
P104	C8	HDR,STR 02PIN LKG,.156CC BRKY	320114
P105	E7	HDR,STR 02PIN LKG,.156CC BRKY	320114
P106	E7	HDR,STR 07PIN LKG,.156CC,BRKY	320105
P107	F7	HDR,STR 03PIN LKG,.156CC,BRKY	320030
P108	F6	CONN,02 PIN MALE	320122
P109	F6	CONN,03 PIN MALE	320124
P110	F7	CONN,MALE,PC MTG,08 POS,AMP	320357
P111	F7	CONN,02 PIN MALE	320122
P112	F7	HDR,STR 02PIN LKG,.156CC BRKY	320114
P113	E6	CONN,4PIN MALE,AMP 350211-1	320118
P114	E6	CONN,02 PIN MALE	320122
P115	E6	CONN,02 PIN MALE	320122
P116	D6	HDR,STR 26PIN DUAL ROW,.100CC	320167
P117	F7	HDR,STR 02PIN LKG,.156CC BRKY	320114
P119	E7	HDR,STR 04PIN LKG,.156CC	320025
P120	D6	CONN,02 PIN MALE	320122
P121	A6	HDR,STR 26PIN DUAL ROW,.100CC	320167
P122	A8	TERM,PC,MA,.093	320002
P123	E7	CONN,02 PIN MALE	320122
P124	E7	CONN,02 PIN MALE	320122
P125	C4	HDR,STR 02PIN LKG,.156CC BRKY	320114
P126	C4	HDR,STR 02PIN LKG,.156CC BRKY	320114

Q101	D7	RECTIFIER,BRIDGE,VH24B	210061
Q102	E7	XSTR,TRIAC,4.0 AMP,TO-220AB,	200040
R101	A7	RES,FILM,10 OHM,1/4W,5%	100065
R102	A7	RES,FILM,10 OHM,1/4W,5%	100065
R103	A7	RES,FILM,10 OHM,1/4W,5%	100065
R104	A7	RES,FILM,10 OHM,1/4W,5%	100065
R105	A7	RES,FILM,10 OHM,1/4W,5%	100065
R106	A7	RES,FILM,10 OHM,1/4W,5%	100065
R107	A7	RES,FILM,10 OHM,1/4W,5%	100065
R108	A7	RES,FILM,10 OHM,1/4W,5%	100065
R109	A7	RES,FILM,10 OHM,1/4W,5%	100065
R110	A7	RES,FILM,10 OHM,1/4W,5%	100065
R111	A7	RES,FILM,10 OHM,1/4W,5%	100065
R112	A7	RES,FILM,10 OHM,1/4W,5%	100065
R113	A7	RES,FILM,10 OHM,1/4W,5%	100065
R114	A7	RES,FILM,10 OHM,1/4W,5%	100065
R115	A6	RES,FILM,10 OHM,1/4W,5%	100065
R116	A6	RES,FILM,10 OHM,1/4W,5%	100065
R127	A4	RES,FILM,100K OHM,1/4W,5%	100014
R128	A4	RES,FILM,68K OHM,1/4W,5%	100013
R129	A5	RES,FILM,470K OHM,1/4W,5%	100034
R130	A5	RES,FILM,3K OHM,1/4W,5%	100059
R132	F7	RES,FILM,100K OHM,1/4W,5%	100014
R133	D6	RES,FILM,100K OHM,1/4W,5%	100014
R134	A6	RES,FILM,10K OHM,1/4W,5%	100010
R135	A6	POT,CERMET,PC MT,END ADJ,50K	102014
R136	A4	RES,FILM,10K OHM,1/4W,5%	100010
R137	F7	RES,WW,10K,5W,5%	103042
R138	E7	RES,FILM,2.21K OHM,1/4W,1%	103043
R139	E7	RES,FILM,475 OHM,1/4W,1%	103044
R140	E7	POT,CERMET,PC MT,TOP ADJ,10K	102028
R141	E7	RES,3.16 OHM,1/4W,1%	103045
R142	D7	RES,FILM,10K OHM,1/4W,5%	100010
R143	F6	RES,FILM,10K OHM,1/4W,5%	100010
R144	D6	RES,FILM,10K OHM,1/4W,5%	100010
R145	D7	RES,FILM,10K OHM,1/4W,5%	100010
SP101	A4	SPEAKER,MSC-300T	150010
U101	A8	IC,MC14503BCB,MOTOROLA ONLY	220098
U102	B8	IC,MC14503BCB,MOTOROLA ONLY	220098
U103	B8	IC,MC14503BCB,MOTOROLA ONLY	220098
U104	B8	IC,MC14503BCB,MOTOROLA ONLY	220098
U105	A5	IC,LM311,VOLTAGE COMPARATOR	220035
U106	D8	IC,CD4069BE,NATIONAL ONLY	220056
U107	A6	IC,CD4069BE,NATIONAL ONLY	220056
U108	F7	IC,CA3079,ZERO-VOLTAGE SWITCH	230046
U109	E6	IC,74HCT04N HEX INV W/LSTTL	220136
XU101	A8(U101)	SOCKET,PCI 16 PIN USED 316T	320141
XU102	B8(U102)	SOCKET,PCI 16 PIN USED 316T	320141
XU103	B8(U103)	SOCKET,PCI 16 PIN USED 316T	320141
XU104	B8(U104)	SOCKET,PCI 16 PIN USED 316T	320141
XU105	A5(U105)	SOCKET,IC,8 PIN DIP,.30CC,STR	320182
XU106	D8(U106)	SOCKET,IC,14 PIN DIP,.30CC,STR	320181
XU107	A6(U107)	SOCKET,IC,14 PIN DIP,.30CC,STR	320181
XU108	F7(U108)	SOCKET,IC,14 PIN DIP,.30CC,STR	320181
XU109	E6(U109)	SOCKET,IC,14 PIN DIP,.30CC,STR	320181
Z1	A7	RES NET,10P SIP,9@100K,1/8W,2%	103050

020860: PWB ASSY, Motherboard

Z2	A7	RES NET,10P SIP,9@100K,1/8W,2%	103050
		BRKT,SPEAKER	440378
		PWB,MOTHER W/TC,5000,REV J	310143
		SCR,#4-40x.312 PR PNH,STL,ZN	401212
		SCR,#6-32x.25 PR PNH,STL,ZN	401423
		SOCKET,MINTR SPR,.026-.033PD	320134
		SPRT,NYL,PCB,.31HEXx.25L,#6	410084
		STDF,SST,F/F,.25ODx.25L,#6-32	440150
		TIE,CABLE,6/6 NATURAL NYLx5.6L	402511
		TUBING,SHRINK 1/2" DIA	520022
		WSHR,NAR PLAIN,NYLON,NAT,#6	408035

EQUIPMENT REQUIREMENTS:

- Test 5000 Intoxilyzer With Tested Boards.
- Oscilloscope (Hitachi V152-B Or Equivalent).
- Digital Voltmeter (Keithley 175 Or Equivalent).
- Test Eprom 29.07.

TESTING METHODS

Preliminary Checks/Setups

1. Carefully inspect the mother board to be tested for any obvious problems such as solder bridges, missing components, reversed components, wrong components, insufficient solder, cold solder joints, etc... Pay particular attention to the proper polarity of c101 (+40v), rectifier q101, c105, c106, c108 and c123. (see component layout drawing 020617, 020618 - sheet 2). Rotate c101 slightly to eliminate a possible capacitor case to board feed-through short. U105-5 and 6 should be shorted together. Verify r137 is 20kω per note 3 on the schematic.

2. Remove the cpu, ram, printer and mother boards from the 5000 test frame fixture. Insert only the mother board into the test frame fixture at this time.

3. Connect the pressure switch hose to the pressure switch. (568 mother boards 020861 to be used with the flow rate option will not have a pressure switch). Place the following connectors into their respective plugs on the mother board:
   - P107 - (Thermostat)
   - P108 - (AC Power Switch)
   - P109 - (AC Input)
   - P110 - (Power Supply)
   - P111 - (Cell Heater Tape)
   - P112 - (I.R. Lamp)
   - P113 - (40v Transformer)
   - P114 - (Pump)
   - P115 (Simulator Solenoid)
   - P117- (Reset Switch)

4. Check that no shorts are present between the +5.0v, +15.0v, -15.0v and +40.0v lines and ground. The +5.0v fuse should read approximately 5 k ohm to ground, the +40.0v fuse approximately 10 k ohm after c101 is charged up (bleeder resistor r142 in board). Verify that the +5.0v fuse is 7 amps, +15.0v fuse is 2 amps, the -15.0v fuse is 5 amps and the +40.0v fuse is 7 amps. Connect the test fixture bleeder resistor clip lead to the positive side of c101. Verify that the +40.0v discharge switch on the fixture is in the open position.

5. Adjust the rfi detector potentiometer r135 maximum counter clockwise.

6. Connect the ac power cord to the rear of the test intoxilyzer.

Testing Procedure

1. Turn power on. The i.r. Lamp should be lit. Check for the proper voltages at the appropriate fuses. The dc voltages should be +5.0v ± .5; +15.0v ± 3.0; -15.0v ± 3.0; +40v ± -6.0. Ac line

voltages should be present at p111-2 (cell heater tape) and p120-1 (fan). Verify that the ac line voltage is present at p111-1 (left side) when r140 (temperature set potentiometer) is adjusted fully counter clockwise. Adjust r140 clockwise until the ac voltage disappears at p111-1. (note: there will be a slight warm-up necessary on the first board being tested due to the cell not being up to temperature). Adjust r140 just slightly beyond the point where you lose ac at p111-1 (approximately 45^0 from the 12:00 position).

2. Turn power off. Discharge any remaining voltage on c101 by closing the discharge switch on the test fixture momentarily.

3. Install the test cpu, printer and ram boards into their respective connectors on the mother board. Plug in the following interconnecting cables to the mother board:
   - P103 - Start Test Switch
   - P105 - Display Power
   - P106 - Processor Board
   - P116 - Display Module
   - P121 - Switch Board
   - J103 - Cpu Board
   - J119 - Comm Board Power

   The cpu board should have the test prom 29.07 installed in socket u203.

4. Turn power on. A diagnostic check will be performed that will test the prom, ram, cell temperature, processor output and printer. If a problem exists in the processor board outputs, the following error codes will be displayed:

   a) Processor error 1 - sync pulse problems, chopper wheel not turning.

   b) Processor error 2 - sync pulse problems, chopper wheel turing too slowly.

   c) Processor error 3 - b a c output drifting in a positive direction.

   d) Processor error 4 - b a c output drifting in a negative direction.

   e) Processor error 5 - d v m reading is above .600.

   f) Processor errors 3, 4, and 5 will be displayed for 5 seconds, then the "dvm test" value will be displayed. Wait until this reading is below .600, then depress the reset switch on the back of the test fixture. After the diagnostic sequence is completed, the date will be displayed. Depress the start test switch again. The dvm test will be displayed.

5. Turn the test fixture off, then on again. Depress the start test switch twice in rapid succession after the "beep" has sounded. This will bypass the diagnostics checks. The date will be displayed. Depress the start test switch again. The dvm will be displayed. Depress the start test switch again. The alphanumeric display should have all l.e.d. segments lit at this time. Depress the start test switch repeatedly while verifying each of the various test functions:

   a) Audio - a "beep" tone should cycle on and off every second.

   b) Pump operation - the pump should cycle on and off every second.

   c) Solenoid/pump - the simulator solenoid should cycle on and off every second, the pump will run continuously.

   d) Blank position - no test function.

e) Status - the display will consist of ones and zeros, denoting the on or off states of the various system checks. Do not depress the start test switch again until the following status checks are made! The display should be 1001110 0000.

I. The first status bit checks the cell thermostat - p107 is jumpered to always show this function as being up to temperature.

II. The second status bit checks if rfi is present. Turn r135 clockwise until the bit reads "1". Turn r135 slowly counter clockwise until the bit reads "0", then keep adjusting the potentiometer counter clockwise another 1 1/2 turns. Place the police 2-way radio near the front of the fixture and depress the transmit switch. The status bit should go to a "1". Call out "rfi" when performing this check so that other technicians are aware of the presence of rfi in the area. Turn off the police radio.

III. The third status bit checks the closing of the pressure switch. No check will be made on this bit due to the flow rate option for the board.

IV. The fourth status bit indicates power is on and the reset switch is off. No test is made to verify this function.

V. The fifth status bit is a check on the acetone circuitry. No test is made to verify this function.

VI. The sixth status bit is a check on the printer margin setting. Move the roller bar slightly until the cherry switch is disengaged. The status bit should change from a "1" to a "0". Move the roller bar back to engage the cherry switch.

VII. The seventh status bit is a check on the printer card insertion. Insert a printer card into the back side of the card slot until the reflective optical sensor path is interrupted. The status bit should change from a "0" to a "1". Remove the card.

VIII. The last four status bits will denote the serial number of the completed intoxilyzer unit. These digits should always be "0000" on a new untested board.

6. Depress the start test switch again. The display should show the position of all the switches on the switch board. With all the switches down, the display should show 0000000x11100 00. The switches from left to right are s1 to s15. The last two switches set the year. The switch functions are:

- S1 - S3 - Cms Mode
- S4 - Third Digit Disable
- S5 - Display The Breath Test Cycle
- S6 - Sample Capture
- S7 - Internal Standards
- S8 - Not Used (Options)
- S9 - Aca Mode
- S10 - Set Time
- S11 - Set Date
- S12 - Increment Clock Numbers
- S13 - Print Inhibit
- S14/S15 - Year Setting

7. Depress the start test switch. The date should be displayed. Depress the start test switch again. The month display should be flashing on and off. Switch s12 up and down as

necessary to verify that the month can be set properly. Depress the start test switch again. The day display should be flashing on and off. Operate s12 again and verify that the day can be properly set. Depress the start switch again. The year display should be flashing on and off. Verify that the correct year can be set by turning s14 and s15. Depress the start test switch again.

3. Once the time is displayed, depress the start test switch again. The minutes display should be flashing on and off. Repeat the operation of s12 to verify that the minutes can be properly set. Depress the start test switch again. The hours display should be flashing on and off. Repeat operation s12 to verify that the hours can be properly set. Depress the start test switch again.

9. The display will now call for a printer card to be inserted into the card slot. Inspect the card for the time and date that was set in steps 5.2.7 and 5.2.8 after the card is expelled from the printer. Verify the normal alpha - numeric printout is correct for test software 29.07.

10. After the print test is completed, the display should go to "keyboard test". Depress the start test switch. The "battery ram" test should now be displayed. After the ram board has counted down to "01", "commtest" will be displayed.

11. Turn the test fixture off. Discharge the +40v capacitor. Remove the ac power cord from the rear of the unit. Place the test label marked with the test technician's clock number, workorder number (if known) and date of the successful testing of the board near the serial number marking on the board. Remove all cables and connectors, then place the completed board in the static proof bag before any further handling is performed.

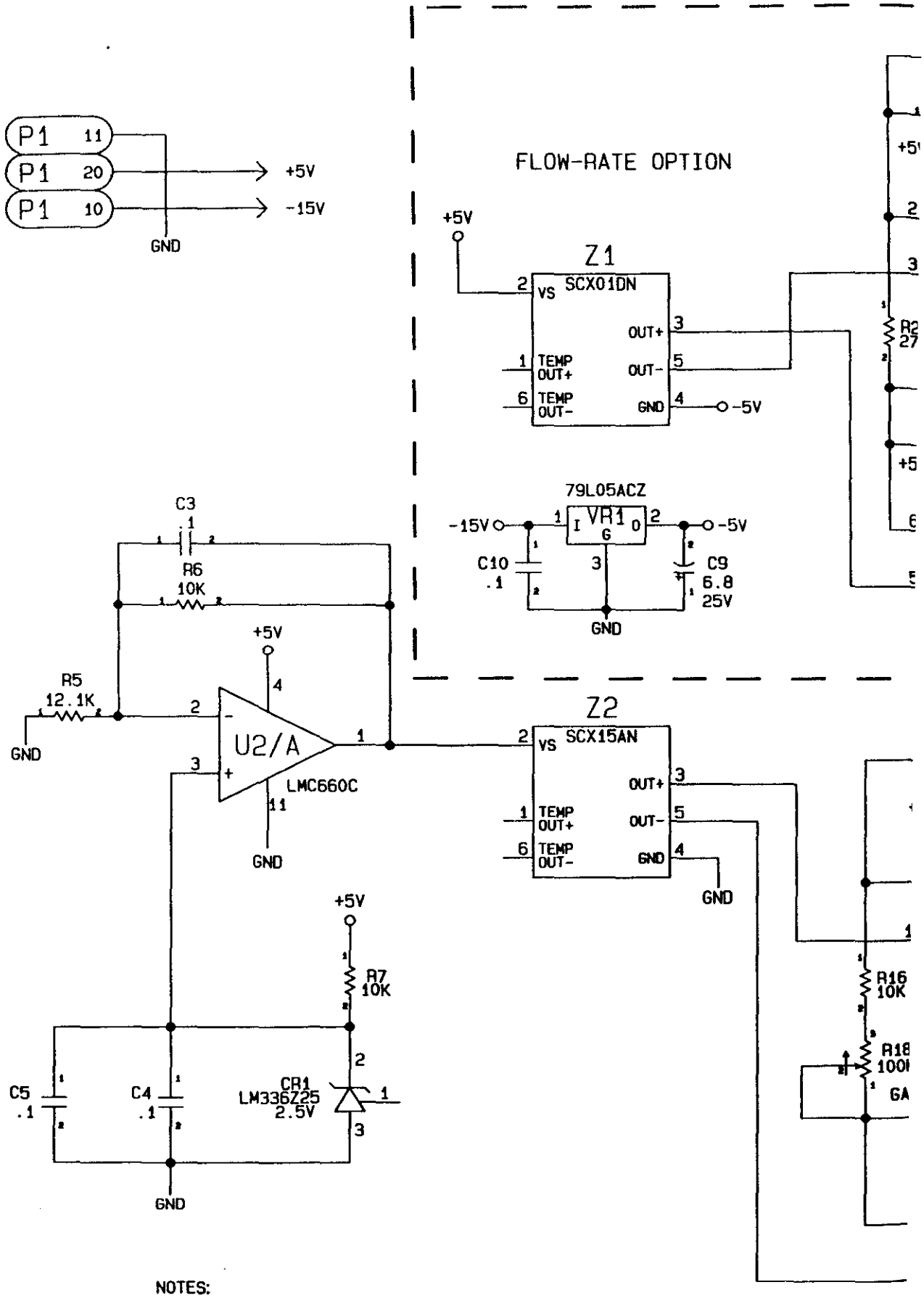

NOTES:

UNLESS OTHERWISE SPECIFIED:

1. ALL RESISTORS ARE IN OHMS, 1/4W.

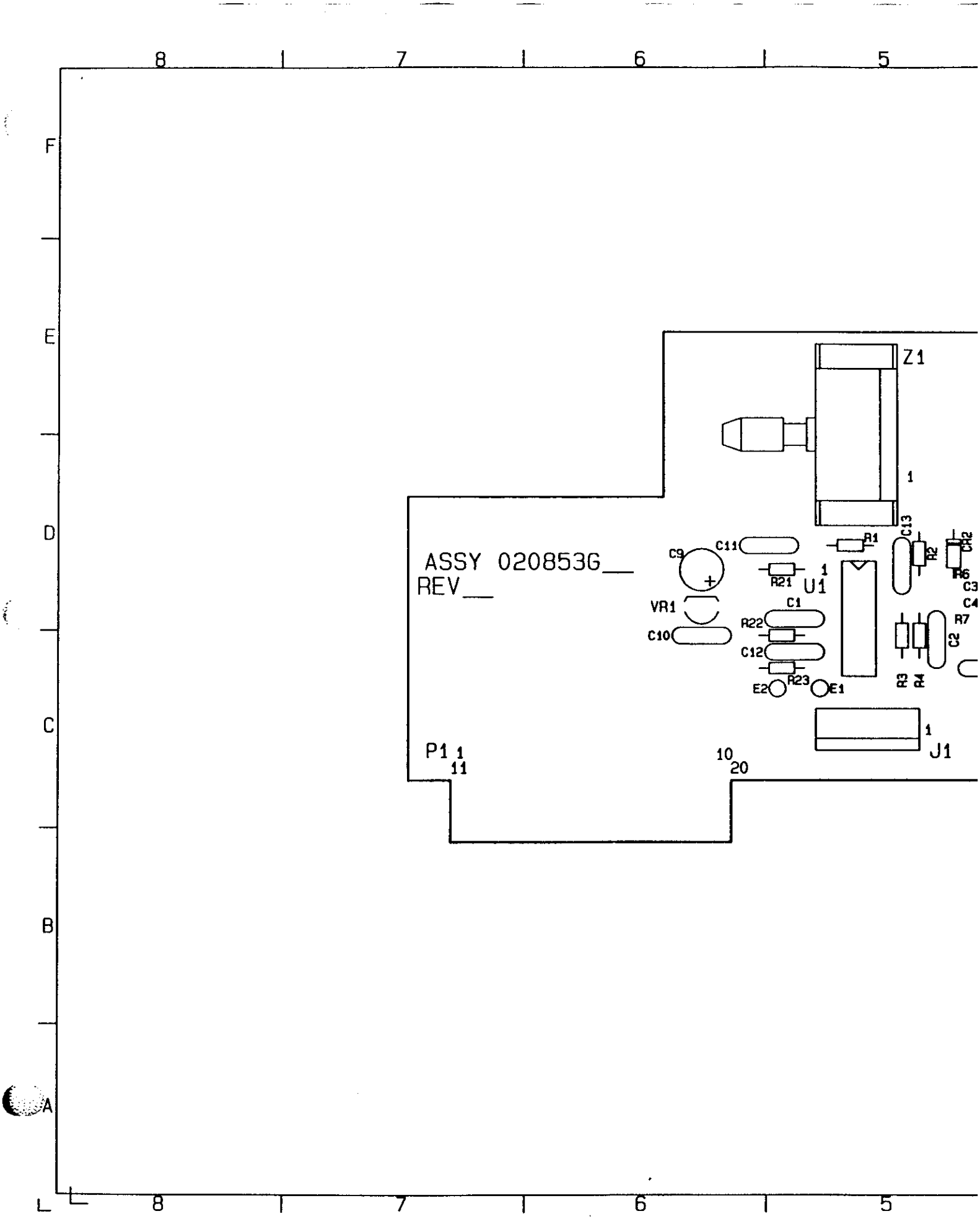

ASSY 020853G__
REV__
Z1
1
C13
R1
R2
CR2
R6
C3
C4
C9
C11
R21
U1
1
VR1
C1
R22
C10
C12
R23
E2
E1
R7
C2
R3
R4
1
J1
P1
1
11
10
20

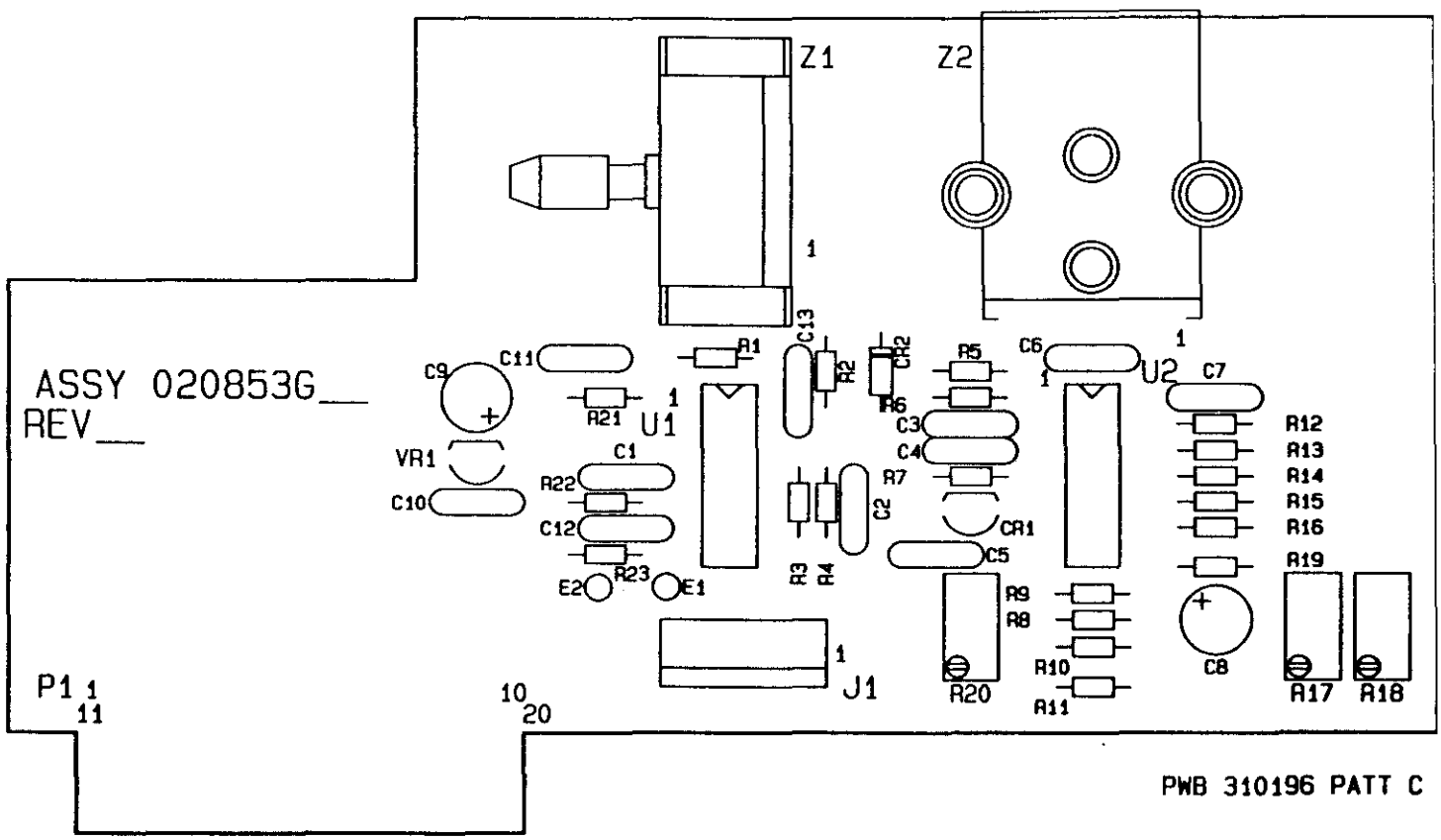

Z1
Z2
1
ASSY 020853G__
REV__
C9
C11
R1
C13
R2
CR2
R5
C6
U2
C7
R21
U1
R6
C3
C4
R12
R13
R14
R15
R16
R19
VR1
C1
R22
R7
C10
C12
C2
CR1
C5
R23
E2
E1
R3
R4
R9
R8
R10
R11
R20
C8
R17
R18
J1
P1
11
10
20
PWB 310196 PATT C

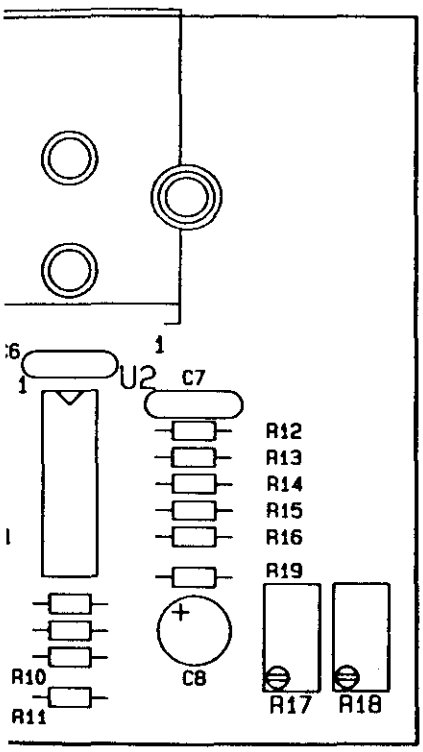

PWB 310196 PATT C

PWB ASSY, OPTIONS, 5000/68
020853 REV C

Bill of Materials

Assembly Number: 020853
Assembly Desc.: PWB ASSY, Options

REFERENCE DESIGNATOR	COMPONENT LOCATION	COMPONENT DESCRIPTION	CMI REPLACEMENT PART NUMBER
C3	D4	CAP,CER,.1UF,20%,50V	110005
C4	D4	CAP,CER,.1UF,20%,50V	110005
C5	C5	CAP,CER,.1UF,20%,50V	110005
C6	D4	CAP,CER,.1UF,20%,50V	110005
C7	D4	CAP,CER,.1UF,20%,50V	110005
C8	C4	CAP,TANT,2.2UF	905004
CR1	C4	IC,LM336Z02.5,RGLTR NAT ONLY	230030
J1	C5	HDR,STR 06PIN LKG,.100CC	902303
R10	C4	RES,FILM,100K OHM,1/4W,5%	100014
R11	C4	RES,FILM,10K OHM,1/4W,1%	904034
R12	D4	RES,FILM,100K OHM,1/4W,5%	100014
R13	D4	RES,FILM,10K OHM,1/4W,1%	904034
R14	D4	RES,FILM,10K OHM,1/4W,1%	904034
R15	C4	RES,FILM,100K OHM,1/4W,5%	100014
R17	C4	POT,CERMENT,PC MT,TOP ADJ,100K	102039
R18	C5	POT,CERMENT,PC MT,TOP ADJ,100K	102039
R19	C4	RES,FILM,100K OHM,1/4W,5%	100014
R5	D4	RES,FILM,12.1K OHM,1/4W,1%	904036

Test Procedure/Troubleshooting Tips

NOTES:

EQUIPMENT REQUIREMENTS:

- Digital Voltmeter (Keithley 175 Or Equivalent).
- Option Board Test Fixture.
- Soldering Iron.
- Approximately 18" Of Tygon Tubing 5/32" I.D.

TESTING METHODS

Preliminary Checks/Setups.

1. Carefully inspect the option board for any problems such as solder bridges, missing components, reversed components, insufficient solder, cold solder joints, etc., (be especially critical around the z1 and z2 hand soldered parts).

2. Verify that no shorts occur between p1-10 (-15v), p1-11 (grd) and p1-20 (+5v) on the option board.

3. Insert the options board into the test fixture connector p1. Connect the test fixture output connector to j1 on the board.

4. Turn power on to the unit under test. Check for following voltage:
   - U2-4 - +2.5 VDC ± .15 VDC
   - U2-3 - +2.5 VDC ± .15 VDC
   - U1-11 - -5.0 VDC ± .2 VDC (Flow Rate Option Only)

5. Adjust r18 for 2.20 vdc at u2-7.

6. Adjust r17 for +3.20 vdc at the "b" test point on the fixture. Readjust the setting of r18 and r17 as necessary to obtain the correct voltage at u2-7, "b" test point.

7. Place the tygon tubing onto the a port of z2. Create an altitud e change by sucking slightly on the tubing. The voltage at the "b" test point should decrease.

8. If the flow rate option is installed on the board, adjust r20 for an off-set voltage of +.450 vdc at test point "f".

9. Place the tygon tubing onto the b port of z1. Blow gently into the tubing and verify that the voltage at test point "a" goes in a positive direction.

10. Turn power off to the unit under test. Remove the tygon tubing from z1-a or z2-b. Remove the unit under test from the test fixture. Place a test label under the board revision marking. Record your initials, month/year and work order on the label. Place the tested board in a static proof bag, container or carrier before any other handling is performed.

Part II

Final Instrument Testing Procedures

- **Chapter 11, Final Unit Test Procedure** 41
- **Chapter 12, Instrument Calibration Procedure** 42

NOTES:

Chapter 12

Instrument Calibration Procedure

Equipment requirements

- Digital Voltmeter - Fluke 8050a Or Equivalent (Troubleshooting Purposes Only).
- Wet Bath Simulators With Various Solution Values:
  - H_2o (Water Reference).
  - .020 Brac.
  - .040 Brac.
  - .080 Brac.
  - .100 Brac.
  - .150 Brac.
  - High Acetone .100 Brac Or Higher.
- Vacuum Pump.
- Digital Thermometer - Fisher Scientific Or Equivalent.
- Test Keyboard (Ibm "At" Model Or Equivalent); (Cardinal Keyboard).
- Ibm Prowriter Printer Or Equivalent.
- Flow Rate Gauge (Gilmont D7093) With Pump And Adjustable Power Supply Of +20 Volts, 10 Amps.
- Calibration Platform.

Preparation

Preliminary Instructions.

1. Verify that the intoxilyzer to be calibrated has completed the three day burn-in cycle. The intoxilyzer to be calibrated should have been turned on a minimum of 1.0 hours in the calibration room for stabilization purposes.place the intoxilyzer on the calibration platform.

2. Check that the customer software has been placed in the processor (3 filter units use 53.12.86; 5 filter units use 55.12.86) and cpu board. If customer software is not available, use the oregon software.

3. Place all the appropriate covers on the intoxilyzer. (**note:** connect simulator heated hose connector to the +15 volt pins on the mother board if this option is called for on the unit).

4. Connect the external printer to the rear of the unit if this option is in the unit. Check that a sufficient supply of paper is available to collect the printer calibration data.

5. Check that all simulators are up to temperature and sealed properly. Any questionable heating problems must be checked with the digital thermometer. Any questionable air leak problems must be checked with the vacuum pump. (**note:** all tygon tubing from the vapor output port of the simulators is kept very short (approximately 2") to minimize the effect of condensation on the readings).

6. Verify that the temperature in the calibration room is between 71° f and 75° f before proceeding with the calibration routine.

System checks.

7. Connect the ac power cord to the rear power receptacle. **Be very careful that the ac power source is correct for the unit being calibrated! (110 vac or 220 vac).**

8. Turn power on. The display should indicate a "not ready" mode, then go into a "warm up" period mode of operation. **Do not reset the unit at this time!**

9. After approximately 10 to 15 minutes, the intoxilyzer will come out of the "warm up" mode and perform a diagnostic check. This may vary with customer software, but would normally consist of the following:

   a) prom check.
   b) ram check.
   c) temperature check.
   d) processor check.
   e) software version.
   f) internal standards (only checked if intoxilyzer was calibrated previously).
   g) printer test (only checked if intoxilyzer was calibrated previously).
   h) processor check (processor 7,8,9,a will all show "fail").

10. The intoxilyzer display will then indicate the various channel signal and noise readings. Uncalibrated units will normally read signal levels of "4095" or "0000" and noiseof "000".

Calibration.

1. Depress "esc, esc" again until the various menu functions (ch, c, d, i, r, q) are displayed. (**note:** see 6.1 for actual function mode clarification). Depress the "t" key on the keyboard. The display should now prompt the operator to enter the number of solutions that will be used to calibrate the intoxilyzer. The number of solutions that will be used during calibration will normally be "5". Depress the "enter/return" key as necessary for the 40, 80, 100, and 150 solution values. (**note: all solution values entered at this time will be actual gas chromatography values recorded on the alcohol standards analysis data sheets! Always enter the lowest solution to highest solution values).** Depress the "enter/return" key. The operator will be prompted to do an acetone check. Depress the "y" key for "yes" to include acetone detection in the calibration routine. Then press the "enter/return" key to continue with the calibration routine. If the customer does not want the acetone subtract feature, depress the "n" key, then press the "enter/return" key. Check with the responsible quality control personnel if any unit is questionable.

2. Depress the "enter/return" key. Insert a printer card when prompted by the display. The display will then prompt the operator to connect the water reference (h_2o) solution (00) to the calibrate port. **All simulators must be connected to the recirculation port on the rear of the intoxilyzer.** Depress the "start test "switch. The intoxilyzer will now go through eight checks of the water reference (h_2o). The printed result of this test will be performed with the external printer option installed. This data will be stored for the internal printer version until enough data is collected to print a full card of information. If the data being printed fills a printer card, the "card line limit" message will be displayed. The display will then read "press start to continue". Insert a new card when prompted by the display.

3. Remove the reference solution simulator and attach the .020 solution simulator to the cal and recirculation ports when prompted by the display. Depress the start test switch to initiate the calibration routine. Repeat the same sequence for the .040, .080, .100, and .150 solution values. Remove and insert new printer cards when prompted by the display. After all solution values have been completed in the calibration cycle, the "curve fit" data will be printed out.

4. When prompted by the display to attach reference, perform another water reference h_2o (00) routine, then the acetone routine in the same manner as the earlier solutions were performed. After the acetone routine is

completed, a printer copy indicating the successful checking of the acetone subtract for channels 1 and 2 will be generated. Review the data for any unusual readings. **The acetone constant must be higher than 1.000000.**

5. After all calibration data has been successfully stored in the ee prom, perform an "auto cal data" printout by depressing the "start test" switch, the using the "esc, esc -t" keyboard routine. When prompted for the number of solutions, depress the "0" key. Insert the printer card when prompted by the display. The printed card should show the a/d, dvm constant, signal voltage, y intercept, slope and acetone subtract values.

6. Observe the display for the correct time and date. If time and date is incorrect, depress "esc, esc" rapidly on the keyboard. The display should show the various function modes of the software. Depress the "e" key (preliminary test data), then "enter" as necessary, to get to the time, time zone, date, and location inputs. Make any changes that may be appropriate.

7. If the intoxilyzer has the flow rate option, call up this option (k) with the "esc, esc" routine. Turn the power supply to the pump on. Adjust the voltage to the pump until the ball in the gilmont d 7093 flow meter is stabilized at the 14 reading (5.00 l/min.). Whenever the operator is prompted to "set for the 10 press button" command, connect the output of the flow meter to the breath hose. Press the start test switch to enter this value into storage in the ee prom. Repeat this procedure for the 27 readings (10.0 l/min.) And the 39 readings (15.0 l/min.) On the flow meter. The correlation coefficient printed out should be 0.998 or greater.

8. If the gas calibration option is in the unit, depress "esc, esc" and then the "g" key for gas or wet bath calibration. Depress the "w" key for wet bath checking. Set switches 1 and 3 (abaca, s4 (third digit on) and s5 (display during test) on the switch board to the up position. Depress the start test switch. Insert the printer card when prompted by the display. The unit will now do an "abaca" breath and calibration routine. Use the .020 solution simulator for this check. The printed values must be ± .002 of the actual solution value. Repeat the above check for the missing .040 solution ± .002, the .080 solution ± .002, the .100 ± .002 and the .150 solution ± .004. (note: all tolerances are from the actual solution value - i.e. .099 ± .002).

9. Depress the "esc, esc" again. Whenever the various functions are displayed, depress the "c" key, insert a printer card, and perform an "aca" routine with the acetone solution. The test should be aborted and an "interferent detected" message printed out.

10. Depress "esc, esc" again. Whenever the various functions are displayed, depress the "d" key, insert a printer card and perform a diagnostics check. The diagnostics for the prom, ram, temperature, processor, motor speed, ee prom, serial number match, range/stability, and auto calibration should have "passed" printed after them. A printer test of all letters of the alphabet and numbers from 0 through 9 will also be performed.

11. Depress "esc, esc" again. Depress the "i" key whenever the function codes are displayed. Insert the printer card and perform an internal standards check. The readings should be internal 1 - .100 ± .002; internal 2 - .200 ± .004; internal 3 - .300 ± .006.

12. For those units with the internal printer option, depress "esc, esc" again. Depress the "p" key whenever the function codes are displayed. Insert the printer card and perform a printer check. Carefully examine the printer card for the unit's serial number, date, e prom version, time, various functions and printed letters. The last copy should be legible with all seven printer head pins striking hard enough to read easily. The external printer option will print out one line of information including the alphabet, numbers 0 through 9, and !@#$.

13. Place all hard copies of the printed information and the quality control data sheet in a folder and place sequentially in the file cabinet. Save the first copies of the printed cards for engineering review and data collection.

14. Turn power off to the intoxilyzer, unplug the power cord and keyboard (external printer if connected). Place the completed intoxilyzer on the final checkout station bench.

Various function menus displayed.

Display ch, c, d, i, r, q.

- Ch - Single Channel Selection.
- C - Continuous Stepping Of Channels.
- D - Dvm Values*.
- I - Internal Standards*.
- R - Auto Range.
- Q - Quit
- (T) - Auto Calibration Routine (Hidden Code - Not Displayed).

- when d or i is selected, the menu will reappear to allow selection of either single channel (ch) or stepping of channels (c).

Display A, B, C, D, E, F, G, H, I, K, P, V, Q, X, Z.

- A - Air Blank.
- B - Breath Test.
- C - Calibration Test.
- D - Diagnostics Test.
- E - Preliminary Data Entry.
- F - Frequency Check (Clock Adjustments).
- G - Gas Or Wet Bath Calibration Test.
- H - Dvm Test.
- I - Internal Standards Check.
- K - Flow Rate.
- P - Printer Test.
- V - Software Version.
- Q - Quit
- X - Target Value (Solution Value On Calibration Side).
- Z - Record Count.

NOTES:

600 CMI, INC. Buy Items

Assembly 600568G INTOX 5000,110V/KBD/COM/2SOL

Component	Description	List Price
100001	RES,FILM,100 OHM,1/4W,5%	.30
100006	RES,FILM,1K OHM,1/4W,5%	.30
100010	RES,FILM,10K OHM,1/4W,5%	.30
100013	RES,FILM,68K OHM,1/4W,5%	.30
100014	RES,FILM,100K OHM,1/4W,5%	.30
100017	RES,FILM,1 MEG OHM,1/4W,5%	.30
100018	RES,FILM,180 OHM,1/4W,5%	.30
100019	RES,FILM,22 MEG OHM,1/4W,5%	.30
100025	RES,FILM,5.1K OHM,1/4W,5%	.30
100034	RES,FILM,470K OHM,1/4W,5%	.30
100047	RES,FILM,82K OHM,1/4W,5%	.30
100059	RES,FILM,3K OHM,1/4W,5%	.30
100065	RES,FILM,10 OHM,1/4W,5%	.25
100066	RES,FILM,3.3 OHM,1/4W,5%	.30
101013	HTR,SIL RUB,120V,75W,1"Wx15"L	13.30
101030	HTR,15W-120V,5/8x30",00630081	13.80
101073	HTR,15V,9.5W W/ PHONO PLUG	49.10
101078	RES,WW,2 OHM,1%,5W	2.00
102014	POT,CERMET,PC MT,END ADJ,50K	3.60
102028	POT,CERMET,PC MT,TOP ADJ,10K	2.20
102031	POT,CERMET,PC MT,END ADJ,5K	3.30
102039	POT,CERMENT,PC MT,TOP ADJ,100K	3.30
103042	RES,WW,10K,5W,5%	1.40
103043	RES,FILM,2.21K OHM,1/4W,1%	.30
103044	RES,FILM,475 OHM,1/4W,1%	.30
103045	RES,3.16 OHM,1/4W,1%	.30
103050	RES NET,10P SIP,9@100K,1/8W,2%	.55
103060	PHOTOCELL,VACTEC,VTL5C2	9.10
110005	CAP,CER,.1UF,20%,50V	.30
110007	CAP,TANT,68UF,25V	3.85
110011	CAP,CER,.001UF,50V	.30
110030	CAP,TANT,10UF=/-20%,35V	1.65
110031	CAP,CER,30PF,50V,IC#300BCR050K	.30
110032	CAP,CER,20PF,SPRAGUE #5GAQ20	.55
110037	CAP,CER,.01UF,CK05BX103K	.55
110038	CAP,.22UF,CK06BX224K	.85
110061	CAP,TANT,4.7UF+/-20%,16V,RAD	.55
110093	CAP,TANT,47UF,20%,35V	4.95
110097	CAP,CER,120PF,CK05BX121K	.55
110098	CAP,CER,2PF,50V	.30
110099	CAP,CER,10PF+/-10%,500V	1.40
110100	CAP,METAL POLY,.22UF,100V	1.40
110104	CAP,TANT,2.2UF,20V	.85
110109	CAP,TANT,100UF,10V,SCR13C107KM	3.30
110114	CAP,CER,220PF,CK05BX221K	.30
110121	CAP,ELCTLT,4700UF,50V,20%,AXL	7.15
110123	CAP,VAR,7-40PF	12.95
110128	CAP,CER,.033UF,50V CK05BX333K	.35
120012	COIL,1MH+/5%,160MA,19 OHM DCR	5.50
120019	CHOKE,WIDE BAND,180MHZ,700 OHM	1.65

Assembly 000568G INTOX 5000,110V/KBD/COM/2SOL

Component	Description	List Price
120042	XFMR,PWR,28VCT@1.1A,115/230V	27.25
120063	PWR SPLY,110/220IN,+5/+-15 OUT	109.90
130018	XTAL,1.8432MHZ,HC-33/U MP018	6.90
130019	XTAL,LF,32.768KHZ	7.45
130024	XTAL,12MHZ,M-TRON	2.50
130025	XTAL,1MHZ	12.65
140023	FUSE,PICO,5A,LITTLEFUSE 251005	1.40
140029	DISPLAY,IEE #31922-03	171.60
140037	FUSE,3AG,3AMP,250V	.55
140038	FUSE,PICO,2AMP,#276002	1.40
140039	FUSE,PICO,7A,255007	1.40
140040	SOURCE,IR,COATED,NEP	38.80
140058	FUSEHOLDER,PNL MT,LOW PROFILE	4.70
140075	INTERRUPTER,OPTEK #OPB840W55	5.90
150010	SPEAKER,MSC-300T	5.50
160008	FILTER,OCLI,3.489 MICRONS	35.50
160010	FILTER,OPTICAL,3.38 MICRONS	35.50
160012	LENS,ASPHERIC,POLY IR5,1.45OAD	14.85
160013	FILTER,OCLI,3.80 MICRONS	35.50
200026	XSTR,4861,JFET	1.65
200038	XSTR,TIP122,DAR PAIR	.85
200040	XSTR,TRIAC,4.0 AMP,TO-220AB,	4.40
200052	XSTR,2N2222,NPN,GP AMPL,TO-18	.55
210001	DIODE,1N4148 COMPUTER GRADE	.30
210002	DIODE,1N4001	.30
210023	DIODE,1N746A ZENER (3.3V)	.30
210056	PC6-90 TEMP SWITCH MTS-40A-2	21.20
210058	THERMISTOR,JA41J1	5.25
210061	RECTIFIER,BRIDGE,VH24B	3.85
210065	VARISTOR,GE V130LA10AM0V	.85
210078	DETECTOR,PBSE,SGL STAGE COOLNG	610.50
210082	DIODE,PAD100(SILICONIX)	4.70
210086	SENSOR,SCX15AN,PREC COMP PRESS	70.20
220035	IC,LM311,VOLTAGE COMPARATOR	.90
220036	IC,LM339,QUAD VOLT COMPARATOR	.55
220056	IC,CD4069BE,NATIONAL ONLY	.55
220070	IC,4066,QUAD BILATERAL SWITCH	.55
220089	IC,8255A-5 PPI I/O PORT	8.80
220096	IC,ADC1001CCJ-1,A/D CONVERTER	42.90
220098	IC,MC14503BCB,MOTOROLA ONLY	.55
220101	IC,MC145411 BIT RATE GENERATOR	3.85
220119	IC,74HC08N,QUAD INPUT AND GATE	1.10
220124	IC,74HC04N, HEX INVERTER	1.10
220134	IC,NEC UPD43256BCZ-70L OR	14.85
220135	IC,MM58274,REAL TIME CLOCK	33.85
220136	IC,74HCT04N HEX INV W/LSTTL	.55
220138	IC,74HC245AN,BUS TRANSCEIVER	1.95
220140	IC,74HC244AN,OCTAL BUFFER	1.65
220141	IC,74HC14N HEX SCHMITT INVERT	1.10
220144	IC,12 BIT A/D CONV,MAXIM	41.25

Assembly 000568G INTOX 5000,110V/KBD/COM/2SOL

Component	Description	List Price
220145	IC,MAX695CPE,MICROPROC RESET	12.40
220146	IC,P80C51FA,MICROCONTROLLER	18.05
220149	IC,NM93C46N,SERIAL EEPROM	4.15
220154	IC,MC74HC154N,4 TO 16 DECODER	1.95
220155	IC,74HC373N,OCTAL LATCH	.85
220156	IC,AD7524JN,D/A CONV,8-BIT MUL	3.90
220163	IC,MK4864N-120NS SRAM 8Kx8BIT	15.40
220165	IC,PALCE20V8Q-15PC,PRGM LOGIC	5.85
220166	IC,Z8400,NMOS Z80 CPU,4MHZ	4.40
220167	IC,Z8440,NMOS SIO CNTRLLR,4MHZ	4.20
220178	IC,74HC138AN,1OF8 DECON/DEMUX	.65
230013	RGLTR,LM340T12,+12V,TO220	.85
230014	IC,LM320T12,-12V RGLTR	3.05
230022	IC,CA3140E,MOS/FET OP AMP	1.10
230030	IC,LM336Z02.5,RGLTR NAT ONLY	1.50
230035	IC,DS1488N,QUAD LINE DRIVER	1.10
230036	IC,DS1489N,QUAD LINE RCVR	1.10
230046	IC,CA3079,ZERO-VOLTAGE SWITCH	1.50
230053	IC,DG212CJ,4 CHAN SPST ANGL SW	5.50
230054	IC,TL034ACN,OP AMP	7.50
230056	IC,CA3280E,OPNL XCNDCT AMPL	4.40
230066	IC,LMC660CN,CMOS QUAD OP AMP	3.90
230067	IC,74HCT4052,ANALOG MUXIDEMUX	1.10
300037	SWITCH,SLIDE,SPDT,PC MT	1.65
300044	SWITCH,DIP, 8-SPST	1.20
300050	SENSOR,REFLECTIVE	16.25
300057	SWITCH,ROCKER,SPDT,ON/NONE/MOM	12.65
300084	SWITCH,PRESSURE,"B" RANGE	19.10
310118	PWB, THERMOSTAT MTG - REV D	13.20
310120	PWB,PRINTER,REPL,5000	21.45
310129	PWB,SWITCH,FUNCTION,5000,REV C	7.70
310143	PWB,MOTHER W/TC,5000,REV J	105.60
310167	PWB,COMM,5000VA/866,PATT E	8.80
310183	PWB,PROC,MULTCHNNL,5000N,PAT D	30.25
310186D	PWB,MICRCNTRLLR,5000/568,PAT D	35.65
310188	PWB,CPU,5000/68,PATT B	59.40
310196	PWB,OPTIONS,5000/68,PATT C	16.65
320002	TERM,PC,MA,.093	.15
320014	HDR,STR 06PIN FLAT,.156CC	.55
320025	HDR,STR 04PIN LKG,.156CC	.55
320027	HDR,STR 05PIN LKG,.156CC,BRKY	.35
320028	HSG,SKT,CONN,05CKT,.156CC,LKG	.30
320030	HDR,STR 03PIN LKG,.156CC,BRKY	.55
320031	HSG,SKT,CONN,03CKT,.156CC,LKG	.30
320041	SOCKET,LAMP,GILWAY P/N H998	3.10
320057	LUG,SOLDER,KULKA SMITH #1412-6	.30
320068	TERM,POST,INSUL,.81H,#4-40 MTG	1.30
320075	JACK,PHONO,PNL MT W/.25D BSHG&	2.20
320084	HDR,STR 08PIN FLAT,.100CC	.35
320085	HDR,STR 03PIN FLAT,.100CC	.30

Assembly 000568G INTOX 5000,110V/KBD/COM/2SOL

Component	Description	List Price
320097	TERM,PIN,GND,.093D,18-22AWG	.15
320100	HDR,STR,06 FLAT,.100CC	.55
320102	HSG,SKT,CONN,02CKT.156CC.LKG	.30
320105	HDR,STR 07PIN LKG,.156CC.ERKY	1.10
320114	HDR,STR 02PIN LKG,.156CC ERKY	.55
320117	CONN,3 POS FEM,AMP 1-480303-0	.55
320118	CONN,4PIN MALE,AMP 350211-1	1.40
320119	CONN,4PIN FEM,AMP 1-480424-0	.55
320122	CONN,02 PIN MALE	.85
320123	CONN,02 PIN FEMALE	.55
320124	CONN,03 PIN MALE	1.10
320125	TERM,CRIMP,AMP P/N 60619-1	.30
320130	CABLE,RIBBON,16COND,12"L	29.45
320134	SOCKET,MINTR SPR,.026-.033PD	1.10
320141	SOCKET,PCI 16 PIN USED 316T	2.20
320165	CONN,EDGE,PCB,DUAL22,.156CC	10.75
320167	HDR,STR 26PIN DUAL ROW,.100CC	5.50
320171	SWITCH,PUSH BUT,SS,MOM ACT	17.90
320172	SWITCH,PUSH BUT,DPDT,ALT ACT	17.90
320173	COVER,GREEN,MCR AML51C-100	1.40
320174	COVER,RED,MCR AML51C-10R	1.65
320175	SOCKET,IC,16 PIN DIP,.30CC,STR	.30
320176	SOCKET,IC,20 PIN DIP,.30CC,STR	.55
320178	SOCKET,IC,40 PIN DIP,.60CC.STR	.85
320179	RCPT,PANEL MOUNT,2SKT,LKG	.30
320180	PLUG,FREE HANGING,2 PIN,LKG	.30
320181	SOCKET,IC,14 PIN DIP,.30CC,STR	.30
320182	SOCKET,IC,8 PIN DIP,.30CC.STR	.30
320184	HDR,STR 10PIN LKG,.100CC	.85
320194	CONN,EDGE,PCB,DUAL10,.156CC	9.35
320195	HDR,R/A 10 PIN LG,.100CC	.85
320209	RCPT,R/A,FEM,DB25,BD/PNL MT,AP	8.00
320211	SCREWLOCK,CONN,AMP P/N207952-1	2.50
320213	FILTER,RFI,CURTIS P/N 1600CA03	49.25
320219	SOCKET,IC,28 PIN DIP,.60CC,STR	.55
320269	HDR,STR 04PIN LKG,.156CC	.45
320357	CONN,MALE,PC MTG,08 POS,AMP	1.65
320363	RCPT,FEM,DIN,5POS,PNL MT,	5.80
320370	HDR,STR 02 PIN LKG,.100CC	.55
320417	HDR,R/A 04PIN LKG,.156CC	.85
320441	SOCKET STRIP,30P0S,.100CC,.34H	3.00
320442	HDR,STR 30PIN FLAT,.100CC	1.95
320485	SOCKET,IC,20 PIN DIP,.30CC	2.20
320486	SHUNT,02POS,.025LEAD SIZE,.10C	.15
320488	CONN,MTHR BD/PRESSURE CKT	.60
320489	CONN,PRESSURE/MTHR BD CKT	1.15
320498	SOCKET,24 PIN	.25
320501	CONN,06CKT,SUBMIN TERMINAL BLK	3.55
330027	WIRE,18GA VIO/WHTx18.0"L W/125	.30
330169	WIRE,18GA BLK/WHTx18.0"L W/125	.30

Assembly 000568G INTOX 5000,110V/KBD/COM/2SOL

Component	Description	List Price
330179	JUMPER,PREFMD 22GA INSL,.25/C	.15
330183	JUMPER,PREFMD,22GA INSL,.40C/C	.15
330196	CORD,PWR,BLK,P.E. C3120-108	5.05
330243	JUMPER,PREFMD,22GA INSL,.30C/C	.15
330247	CABLE ASSY,RIBBON,26COND,29"LG	12.65
330249	CABLE ASSY,DATA,MP DSPLY,5000	11.85
330253	CABLE ASSY,COMM,5000	11.85
330255	CABLE ASSY,PWR,MP DISPLAY,5000	11.00
330260	WIRE,18GA YELx14.25"L W/016	.30
330261	WIRE,18GA BLKx9.00"L W/125	.30
330262	WIRE,22GA REDx6.25"L W/016	.00
330263	WIRE,22GA WHTx4.50"L W/016	.55
330271	WIRE,18GA BLUx14.00"L W/125	.30
330272	WIRE,18GA RED/WHTx15.0"L W/125	1.65
330273	WIRE,18GA GRN/WHTx15.0"L W/125	1.65
330274	WIRE,18GA VIO/WHTx6.0"L W/003	.30
330282	WIRE,20GA REDx8.00"L W/016	.30
330283	WIRE,20GA BLUx8.00"L W/016	.85
330284	WIRE,20GA BLKx8.00"L W/016	.30
330286	WIRE,18GA GRN/WHT 7.0"L W/125	1.65
330287	WIRE,18GA RED/WHT 9.0"L W/125	1.65
330288	WIRE,20GA BLKx3.50"L W/003	.30
330289	WIRE,18GA REDx7.50"L W/016	.30
330290	WIRE,18GA BLKx8.50"L W/016	.35
330291	WIRE,18GA BLKx8.00"L W/016	.30
330292	WIRE,18GA REDx8.00"L W/016	.30
330293	WIRE,20GA REDx15.50"L W/016	.30
330294	WIRE,20GA ORGx15.50"L W/016	.30
330295	WIRE,20GA REDx16.50"L W/016	.30
330296	WIRE,20GA BLKx16.50"L W/016	.30
330297	WIRE,20GA BLKx15.50"L W/016	.85
330414	TUBING,EXPANDABLE,3/4"	1.70
330415	CABLE ASSY,PWR,COMM,5000/68	7.15
330445	HARNESS,PWR SPLY TO MB,768	18.20
330455	WIRE,18GA,GRNx9.0"L W/125	.60
340016	PUMP,MAG VIBRATION,115V,60HZ	34.15
340025	MOTOR,12V,MABUCHI EG-530AD-2B	14.85
340026	PRINTER,TDC CORP #8540-101178	412.50
340028	VALVE,SOL OPER,110V	34.70
340031	RELAY,SS,PC MT,5VIN,120/240VOT	13.15
340035	BATTERY,LITHIUM,3.6V,1/2AA	3.65
340048	FAN,110V,HOWARD,P/N 3-15-1321	33.00
400004	NUT,HEX,STL,ZN,#2-56	.10
400015	NUT,KEP,STL,ZN,#8-32	.10
400019	NUT,KEP,STL,ZN,#6-32	.10
400020	NUT,KEP,STL,ZN,#10-32	.10
400021	NUT,KEP,STL,ZN,#4-40	.10
400028	NUT,HEX,STL,ZN,#6-32	.10
401011	SCR,#2-56x.375 PR RDH,STL,ZN	.10
401102	SCR,#3-48x.250 PR RDH,STL,ZN	.10

Assembly 600568G INTOX 5000,110V/KBD/COM/2SOL

Component	Description	List Price
401209	SCR,#4-40x.500 PR PNH,STL,ZN	.10
401211	SCR,#4-40x.250 PR PNH,STL,ZN	.10
401212	SCR,#4-40x.312 PR PNH,STL,ZN	.10
401213	SCR,#4-40x.375 HSH SET,LKG,SST	1.40
401214	SCR,#4-40x.375 PR PNH,STL,ZN	.10
401216	SCR,#4-40x.125 HSH SET,STL,ZN	.25
401220	SCR,#4-40x.250 HS BTNH,STL,BO	.30
401224	SCR,#4-40x.188 HS BTNH,STL,BO	.25
401409	SCR,#6-32x.312 HS BTNH,STL,BO	.25
401412	SCR,#6-32x.375 PR PNH,STL,ZN	.10
401413	SCR,#6-32x.500 PR PNH,STL,ZN	.10
401415	SCR,#6-32x.312 PR PNH,STL,ZN	.10
401421	SCR,#6-32x.312 PR FLH,STL,ZN	.10
401423	SCR,#6-32x.25 PR PNH,STL,ZN	.10
401439	SCR,#6-32x.750 PR PNH,STL,ZN	.10
401443	SCR,#6-32x.250 HS BTNH,STL,BO	.25
401451	SCR,#6-32x.875 PR FLH,STL,ZN	.15
401601	SCR,#8-32x.375 PR RDH,STL,ZN	.10
401610	SCR,#8-32x.250 PR RDH,STL,ZN	.10
401616	SCR,#8-32x.250 HS BTNH,STL,BO	.10
401810	SCR,#10-32x.375 PR PNH,STL,ZN	.10
401812	SCR,#10-32x1.88 PR PNH,STL,ZN	.25
402501	TIE,CABLE,6/6 NATURAL NYLx3.9L	.10
402511	TIE,CABLE,6/6 NATURAL NYLx5.6L	.10
402523	CLAMP,CABLE,SCREW MT,.375D	.15
402545	RETAINER,LAMP	3.85
402550	CLIP,CHRISTMAS TREE,.5HD,.16HL	.35
408001	WSHR,LK,INT TOOTH,STL,ZN,#4	.10
408003	WSHR,LK,EXT TOOTH,STL,ZN,#1/4	.10
408005	WSHR,LK,INT TOOTH,STL,ZN,#2	.10
408018	WSHR,LK,INT TOOTH,STL,ZN,#6	.10
408019	WSHR,RGLR PLAIN,STL,ZN,#6	.10
408022	WSHR,LK,INT TOOTH,STL,ZN,#8	.10
408032	WSHR,LK,INT TOOTH,STL,ZN,#10	.10
408035	WSHR,NAR PLAIN,NYLON,NAT,#6	.10
408041	WSHR,NPRN,.555ODx.160IDx.062T	.55
408044	WSHR,SHLDR,NYL,.312ODx.187SDx	.85
408064	SCR,M2.6x4 PR PHN,STL,ZN	.10
408066	GROMMET, RUBBER	.15
408077	WSHR,.422IDx.875ODX	1.40
408078	WSHR,ROCKFORD 8071-0138,ZINC	.30
408096	WASHER,FLAT,#10	1.10
410064	ADAPTER,.25x.25 MALE	.55
410083	FITTING,PLSTC,#10-32x1/8"BARB	.30
410084	SPRT,NYL,PCB,.31HEXx.25L,#6	.55
410085	SPRT,NYL,PCB,.31HEXx.38L,#6	.55
410087	STDF,ALUM,F/F,.25HEXx.88L,6-32	.55
410088	ELBOW,MALE,P4MEB-4	.85
410090	UNION,1/4 TEE,P4 TUB-4	1.10
410091	FEET,3.4 IN,3M SJ5523,WHITE	.25

Assembly 600568G INTOX 5000,110V/KBD/COM/2SOL

Component	Description	List Price
410092	RETAINER,SOUTHCO 82-35-302-15	.55
410093	RETAINER,SOUTHCO 82-32-101-41	.30
410094	WSHR,SOUTHCO 82046-101-41	.35
410095	SPRING,SOUTHCO 43-13-1-24	.30
410096	STUD,SOUTHCO P/N 82-T-240	1.95
410097	KEY,SOUTHCO P/N 23-90-214-10	1.65
410113	COUPLING,PLC 220-94	3.60
410115	FTG,BRS,BRBD,RT ANG,FEM,IND SP	3.85
410116	FTG,BRS,BRBD,1/4" STRAIGHT BHD	1.40
410125	FITTING,BRS,STR,1/4BARB/1/4NPT	1.40
410150	ELBOW,BRS,3/8"BARBx1/4"NPT	6.35
410151	FITTING,BRS,STR,3/8BARBx1/4NPT	1.65
410168	VALVE,CHECK,3/8 BARB	1.95
410192	FTG,BRS,BARBED,3/8" STR BHD	14.15
410193	FITTING,TEE	4.85
410194	FTG,QUICK CPLG,BARBED .375 DIA	20.20
410195	FITTING,ELBOW,3/8"	12.65
410196	COUPLING	2.35
440087	BRKT,LAMP	4.70
440150	STDF,SST,F/F,.25ODx.25L,#6-32	1.65
440250	BRKT,THERMOSTAT,5000	18.70
440263	BRKT,INTOX 5000 PRINTER,REV.B	14.60
440272	BRKT,BREATH HOSE	6.60
440279	STDF,SST,F/F,.25HEXx.38L,#6-32	1.65
440285	BRKT,INTOX 5000 FAN MTG	10.45
440302	BRKT,5000 SWITCH BD.,REV. B	2.50
440313	BRKT,5000 SOLENID TWO	11.00
440370	BRKT,PANEL,FRONT,5000	26.70
440378	BRKT,SPEAKER	5.25
440382	COVER,SWITCH,5000	4.35
440383	COVER,TOP,5000	50.90
440385	PANEL WELDMENT,BOTTOM,CASE	96.55
440386	COVER,FRONT,CASE,5000	42.10
440458	PLATE,END,RH,5000/866	121.00
440459	COVER,TEST,RH END PLT,5000	14.85
440460	BRKT,CONN,KYBD,5000	15.30
440489	FILLER,FILTER,CHOPPER WHL,1400	1.40
440490	BRKT,CELL MTG,SOURCE END,X68	7.35
440534	ENCL,CHOPPER WHEEL,5000/68	86.70
440535	SPCR,SST,.25ODx.125IDx.25L	1.10
440549	BRKT,PROC MTG/CW CVR,5000/68	26.25
440550	HEATSINK,XSTR,PRCSR,5000/68	4.65
440551	STDF,SST,M/F,.25HEXx.25L,#6-32	2.30
440552	STDF,SST,M/F,.25HEXx.56L,#6-32	2.30
440554	BRKT,SOURCE MTG	2.45
440555	HUB,CHOPPER	29.70
440556	WHEEL,CHOPPER,5000/68	33.80
440560	BRKT,SENSOR,PRESSURE	3.45
440565	STDF,SST,F/F,.25HEXx.938L,#6-32	2.80
440569	BRKT,HOLD DOWN	3.55

Assembly 000568G INTOX 5000,110V/KBD/COM/2SOL

Component	Description	List Price
440571	PANEL,REAR,CABINET	57.75
440578	PLATE,END,LH,5000/68G	121.00
440579	BARREL,CELL,SHORT,81CC,UNPLTD	83.90
440584	FTG,QUICK DISC,FEMALE,1/4MPT	20.35
440742	BLOCK,END,CELL	40.30
440745	BRACKET,POWER SUPPLY,768VA	23.45
440749	PLATE,PWR SUPPLY,768VA	5.60
440804	BRKT,CARD GUIDE SUPPORT	.00
440805	BRKT,CARD DET & GUIDE	.00
450098	LABEL,2 SOL REAR PORTS,5000	.55
450100	LABEL,SW FCTN,"PDE/TDE",5000	2.20
450111	LABELS,INTOX,COMPLETE SET,5000	3.30
450167	TAG,S/N,5000(68)	1.15
460057	GUARD,SE,PB,SQ	10.75
460059P001	FACEPLATE,INTOX 5000	15.95
460072	STRAP	6.60
470084	TUBING,THEROZIPx10.5"	9.35
470085	INSULATOR,TO220	.30
470088	SEAL,CELL	.85
470090	PAD,SHOCK,DISPLAY,50000	1.40
470100	SCREEN,DISPLAY,5000	8.55
470101	SCREEN,FAN,5000	6.60
470145	CAP,PLASTIC,.25IDx.50LG,GREEN	.15
470154	CAP,PLASTIC,.406IDx.375LG,RED	.15
470155	CAP,PLASTIC,.843IDx.500LG,RED	.15
520010	TUBING,SHRINK 1/8" DIA	.10
520011	TUBING,SHRINK,3/16 DIA	.00
520012	TUBING,SHRINK,1/4"D	.00
520017	TUBING,SHRINK,3/8 DIA	.00
520022	TUBING,SHRINK 1/2" DIA	.10
520049	TUBING,SHRINK,BLK,.75"DIA	1.50
520050	TUBING,SHRINK,BLACK,1"DIA	.00
520057	CABLE ASSY,SLAVE LINK	8.45
520058	TUBING,3/8"ID	1.20
530013	TUBING,TYGON,.250IDx.375OD	2.50
530018	TUBING,TYGON,.188IDx.312OD	1.40
530023	HOSE,1/8"	1.00
530030	TUBING,TYGON,.375IDx.562OD	6.48
560010	TAPE,GLASS,1" WIDE,3M #361	65.00
560018	WEATHERSTRIP,1/4x3/4	.00
560019	WEATHERSTRIP,.25x2.75 W/PSA/1	.00
900188	DIODE,1N4148 COMPUTER GRADE	.15
900192	XSTR,TIS93	.60
900193	XSTR,TIS97	.85
900208	SOCKET,IC,16 PIN DIP	.45
900219	TERM,CRIMP,MX SSH,22-28WS,REEL	.15
900220	TERM,CRIMP,MX CH,22-30WS,REEL	.15
902089	HDR,STR 04PIN LKG,.100CC	.55
902303	HDR,STR 06PIN LKG,.100CC	.85
902309	HSG,SKT,CONN,06CKT,100CC,LKG	.85

600 CMI, INC. Buy Items

Assembly 000568G INTOX 5000,120V/KBD/COM/2SOL

Component	Description	List Price
902458	HDR,STR 02 PIN FLAT,.100CC	.15
902618	HSG,SKT,CONN,02CKT,.100CC,LKG	.10
902775	HSG,SKT,CONN,04CKT,.100CC,LKG	.20
903049	IC,LF412CN,DUAL JFET OP AMP	1.50
903361	SCR,#6-32x.375 PR FLH,STL,BO	.10
903401	INSULATOR,XSTR,TO220	.15
903402	WASHER,SHLDR,INSUL,TO220,XSTR	.10
904028	RES,FILM,1.50K OHM,1/4W,1%	.30
904031	RES,FILM,10 OHM,1/4W,1%	.30
904033	RES,FILM,100K OHM,1/4W,1%	.30
904034	RES,FILM,10K OHM,1/4W,1%	.30
904036	RES,FILM,12.1K OHM,1/4W,1%	.30
904045	RES,FILM,150 OHM,1/4W,1%	.15
904055	RES,FILM,1.0K OHM,1/4W,1%	.30
904060	RES,FILM,20K OHM,1/4W,1%	.15
904072	RES,FILM,2K OHM,1/4W,1%	.30
904082	RES,FILM,33.2K OHM,1/4W,1%	.30
904091	RES,FILM,47.5K OHM,1/4W,1%	.30
904093	RES,FILM,475K OHM,1/4W,1%	.30
904103	RES,FILM,6.81K OHM,1/4W,1%	.30
904105	RES,FILM,61.9K OHM,1/4W,1%	.30
904111	RES,FILM,681K OHM,1/4W,1%	.30
904123	RES,FILM,9.09K OHM,1/4W,1%	.30
904187	RES,FILM,1.5M OHM,1/4W,5%	.15
905003	CAP,TANT,1.0UF	.55
905004	CAP,TANT,2.2UF	1.95
905023	CAP,CER,100 PF,500V	.30
905031	CAP,CER,470PF,500V	.30
905065	CAP,METAL POLY,5%,100V,.027	.65
906410	WIRE,HOOK-UP,18AWG,BLK	.00
906415	WIRE,HOOK-UP,18AWG,WHT/RED	.00
906601	WIRE,22GA,BRN,UL 1007	.00
906602	WIRE,22GA,RED,UL 1007,	.00
906604	WIRE,22GA,YEL,UL 1007	.00
906607	WIRE,22GA,VIOLET,UL 1007,	.00
906608	WIRE,22GA,GRAY,UL 1007,	.00
906609	WIRE,22GA,WHITE,UL 1007,	.00
906610	WIRE,22GA,BLACK,UL 1007,	.00
906614	WIRE,22GA,WHT/BLK,UL 1007,VW-1	.00
906615	WIRE,22GA,WHT/RED,UL 1007,	.00
906805	WIRE,18GA GRN,UL 1007	.00
906810	WIRE,18GA,BLK,UL 1007	.00
906815	WIRE,18GA,WHT/RED,UL 1007,	.00
910771	TUBING,SHRINK,BLK,3 32Dx1/2LG	.0